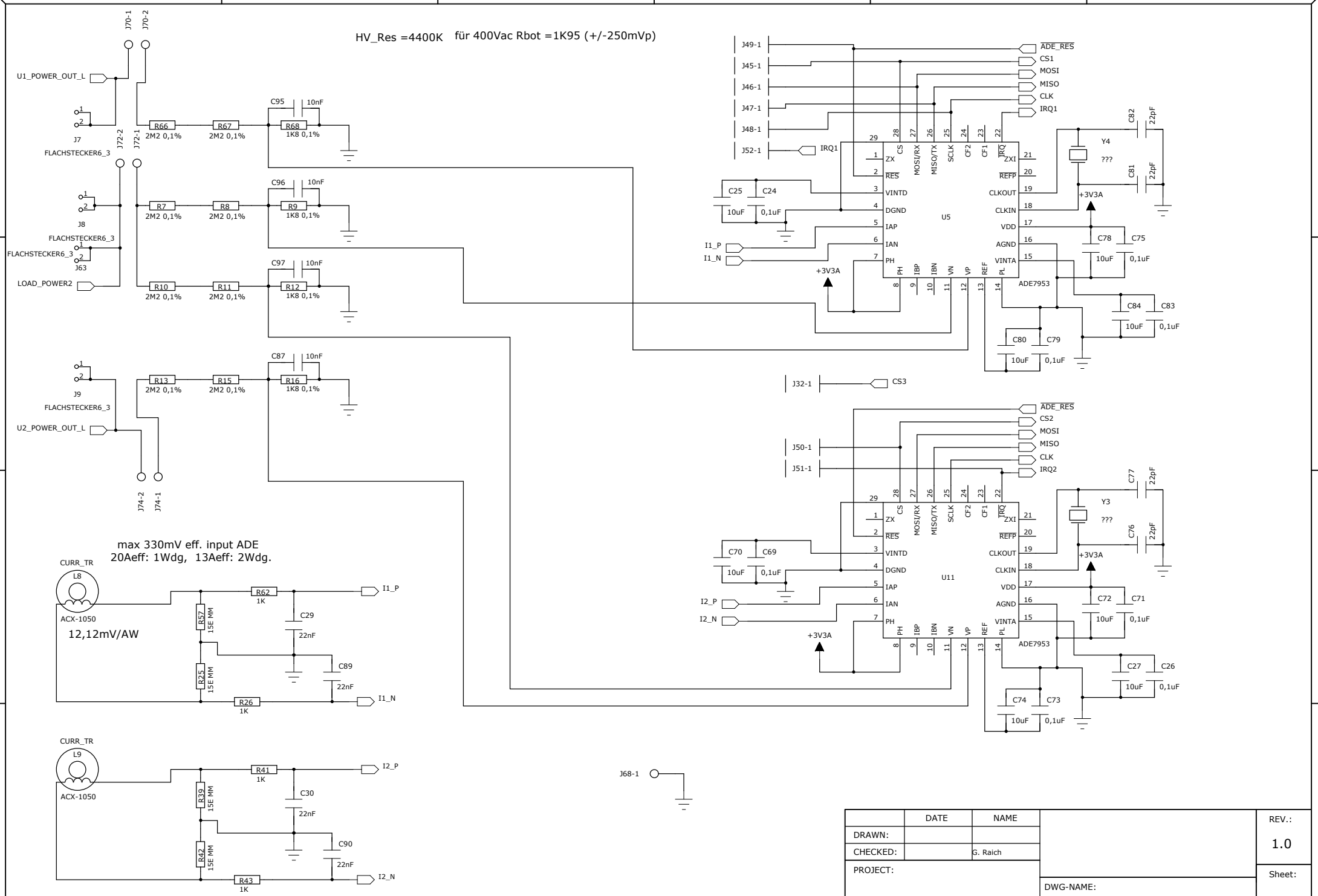

	DATE	NAME		REV.:
DRAWN:				1.0
CHECKED:		G. Raich		Sheet:
PROJECT:			DWG-NAME:	
FILENAME:				