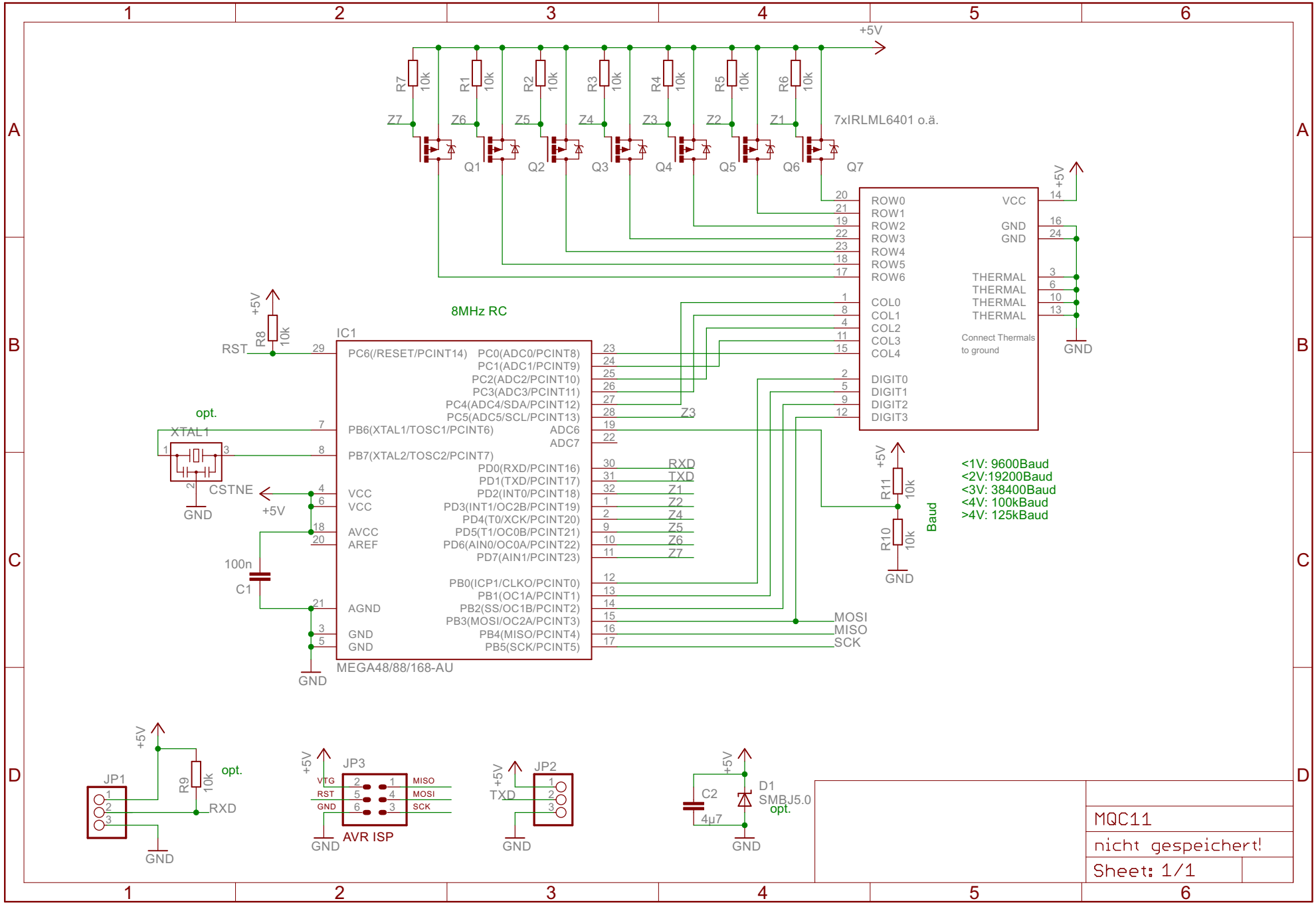
+5V
R7 10k
R1 10k
R2 10k
R3 10k
R4 10k
R5 10k
R6 10k
Z7
Z6
Z5
Z4
Z3
Z2
Z1
7xIRLML6401 o.ä.
Q1
Q2
Q3
Q4
Q5
Q6
Q7
ROW0
ROW1
ROW2
ROW3
ROW4
ROW5
ROW6
COL0
COL1
COL2
COL3
COL4
DIGIT0
DIGIT1
DIGIT2
DIGIT3
VCC
GND
THERMAL
Connect Thermals to ground
8MHz RC
IC1
RST
R8 10k
PC6(/RESET/PCINT14)
PC0(ADC0/PCINT8)
PC1(ADC1/PCINT9)
PC2(ADC2/PCINT10)
PC3(ADC3/PCINT11)
PC4(ADC4/SDA/PCINT12)
PC5(ADC5/SCL/PCINT13)
PB6(XTAL1/TOSC1/PCINT6)
ADC6
ADC7
PB7(XTAL2/TOSC2/PCINT7)
PD0(RXD/PCINT16)
PD1(TXD/PCINT17)
PD2(INT0/PCINT18)
PD3(INT1/OC2B/PCINT19)
PD4(T0/XCK/PCINT20)
PD5(T1/OC0B/PCINT21)
PD6(AIN0/OC0A/PCINT22)
PD7(AIN1/PCINT23)
PB0(ICP1/CLKO/PCINT0)
PB1(OC1A/PCINT1)
PB2(SS/OC1B/PCINT2)
PB3(MOSI/OC2A/PCINT3)
PB4(MISO/PCINT4)
PB5(SCK/PCINT5)
AGND
AVCC
AREF
MEGA48/88/168-AU
opt.
XTAL1
CSTNE
100n
C1
RXD
TXD
MOSI
MISO
SCK
R11 10k
R10 10k
Baud
<1V: 9600Baud
<2V:19200Baud
<3V: 38400Baud
<4V: 100kBaud
>4V: 125kBaud
JP1
R9 10k
JP3
VTG
RST
AVR ISP
JP2
C2 4µ7
D1 SMBJ5.0
MQC11
nicht gespeichert!
Sheet: 1/1