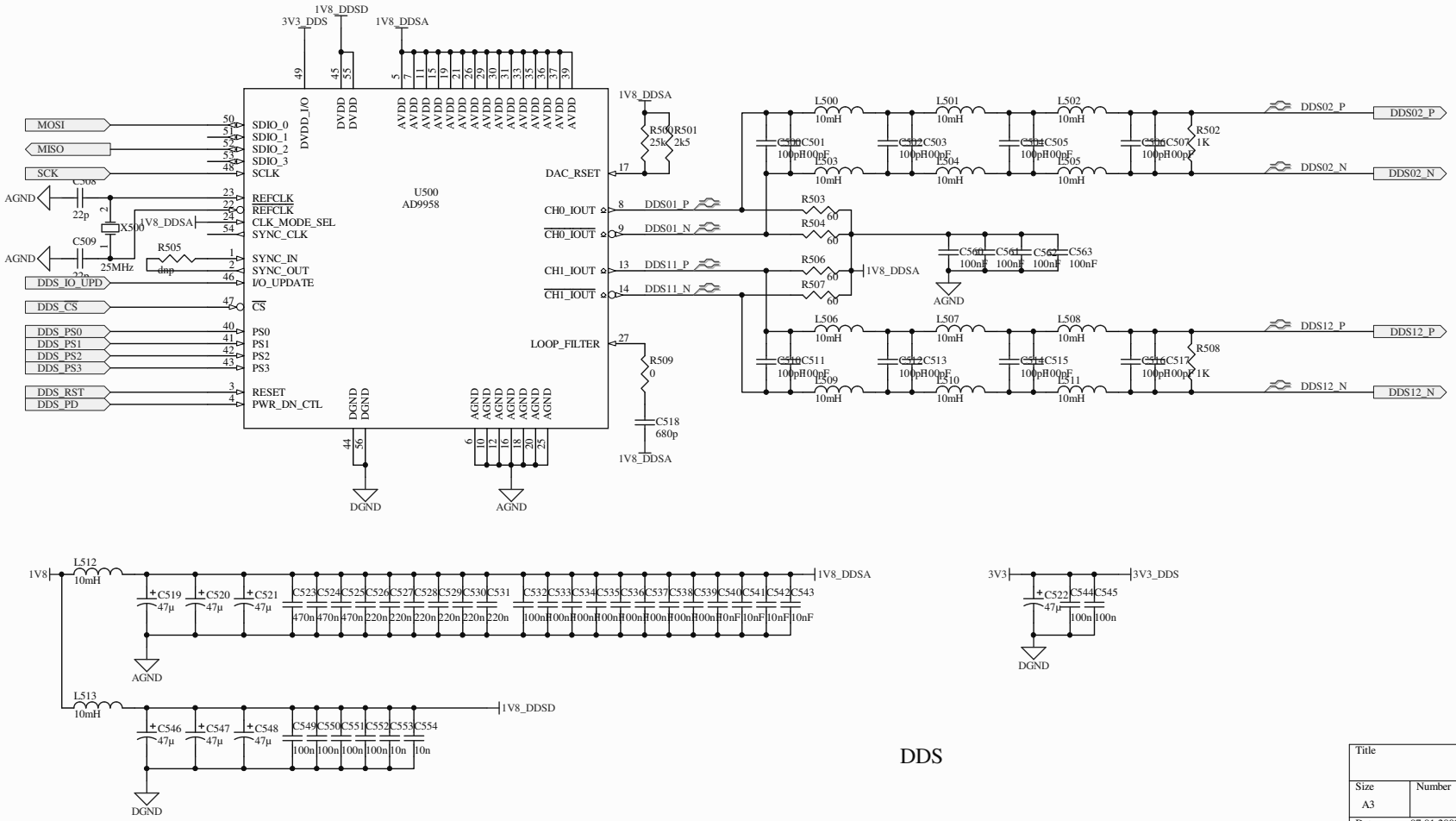

DDS

Title		
Size A3	Number	Revision
Date: 07.01.2009	Sheet of	
File: C:\Programme\..\DDS.SchDoc	Drawn By:	