Notice: INT1 is used in the future to save data from ram into eeprom if power turned off (accu empty)

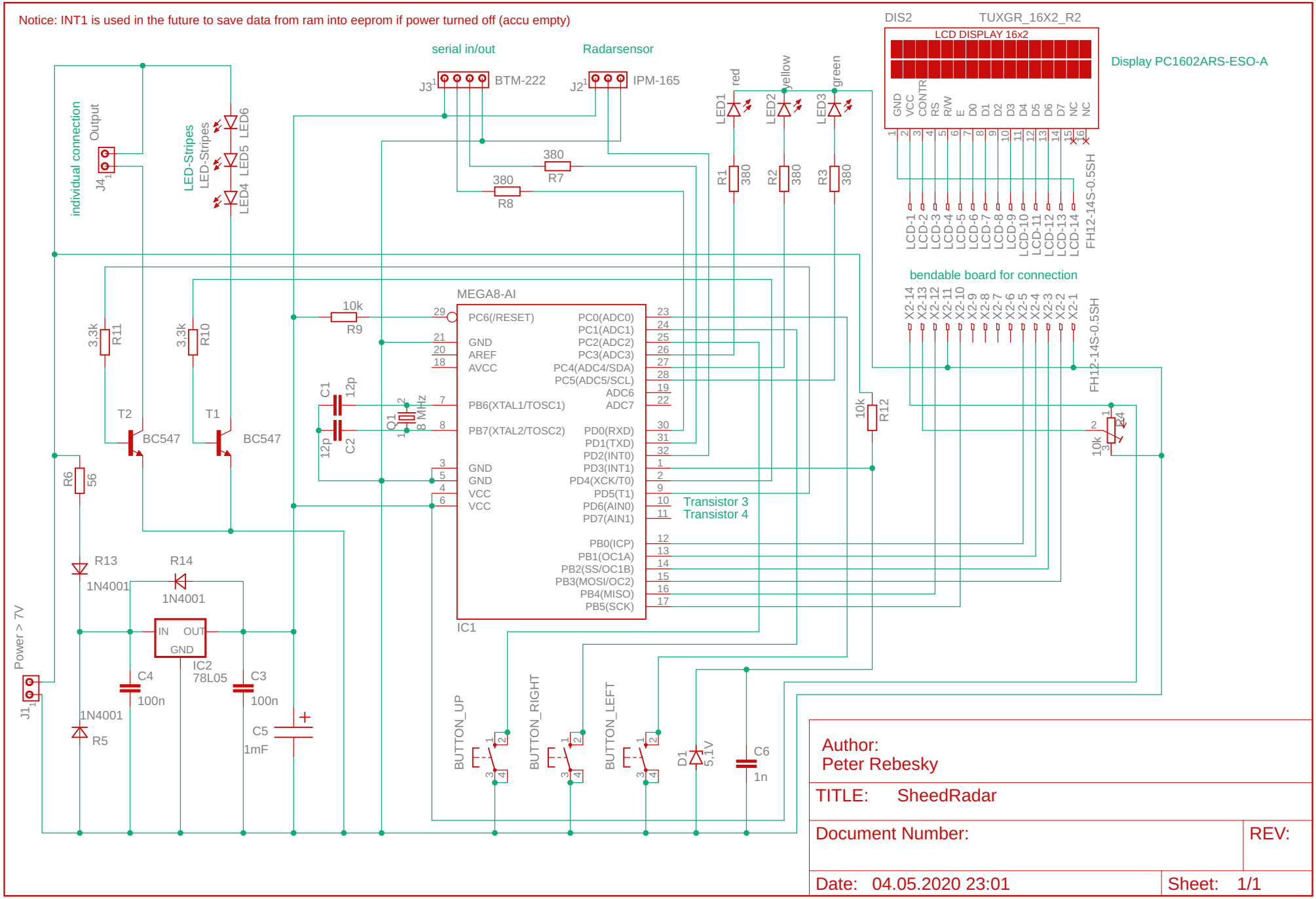

Author:
Peter Rebesky

TITLE: SheedRadar

Document Number:

REV:

Date: 04.05.2020 23:01

Sheet: 1/1