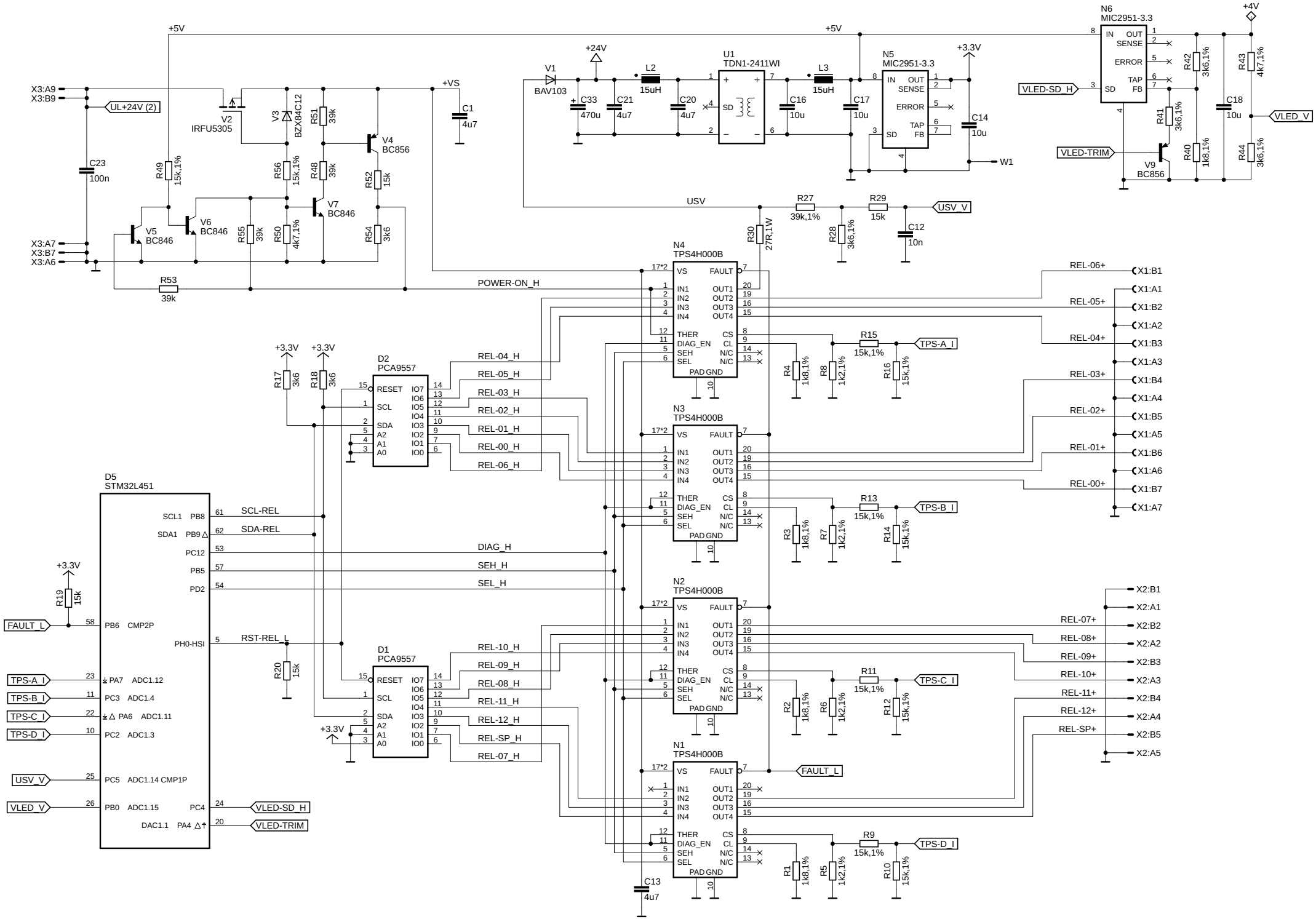
+5V
X3:A9
X3:B9
UL+24V (2)
V2
IRFU5305
V3
BZX84C12
R51
39k
R56
15k,1%
R48
39k
V4
BC856
R52
15k
+VS
C1
4u7
C23
100n
R49
15k,1%
V5
BC846
V6
BC846
R55
39k
R50
4k7,1%
V7
BC846
R54
3k6
X3:A7
X3:B7
X3:A6
R53
39k
POWER-ON_H
+24V
V1
BAV103
C33
470u
C21
4u7
L2
15uH
C20
4u7
U1
TDN1-2411WI
SD
C16
10u
L3
15uH
C17
10u
N5
MIC2951-3.3
IN
OUT
SENSE
ERROR
TAP
FB
SD
+3.3V
C14
10u
W1
N6
MIC2951-3.3
+4V
VLED-SD_H
R42
3k6,1%
R43
4k7,1%
C18
10u
VLED_V
R41
3k6,1%
VLED-TRIM
V9
BC856
R40
1k8,1%
R44
3k6,1%
USV
R27
39k,1%
R29
15k
USV_V
R30
27R,1W
R28
3k6,1%
C12
10n
N4
TPS4H000B
N3
TPS4H000B
N2
TPS4H000B
N1
TPS4H000B
VS
FAULT
IN1
IN2
IN3
IN4
OUT1
OUT2
OUT3
OUT4
THER
DIAG_EN
SEH
SEL
CS
CL
N/C
PAD
GND
REL-06+
REL-05+
REL-04+
REL-03+
REL-02+
REL-01+
REL-00+
X1:B1
X1:A1
X1:B2
X1:A2
X1:B3
X1:A3
X1:B4
X1:A4
X1:B5
X1:A5
X1:B6
X1:A6
X1:B7
X1:A7
R15
15k,1%
TPS-A_I
R4
1k8,1%
R8
1k2,1%
R16
15k,1%
R13
15k,1%
TPS-B_I
R3
1k8,1%
R7
1k2,1%
R14
15k,1%
R11
15k,1%
TPS-C_I
R2
1k8,1%
R6
1k2,1%
R12
15k,1%
R9
15k,1%
TPS-D_I
R1
1k8,1%
R5
1k2,1%
R10
15k,1%
FAULT_L
C13
4u7
X2:B1
X2:A1
X2:B2
X2:A2
X2:B3
X2:A3
X2:B4
X2:A4
X2:B5
X2:A5
REL-07+
REL-08+
REL-09+
REL-10+
REL-11+
REL-12+
REL-SP+
+3.3V
R17
3k6
R18
3k6
D2
PCA9557
RESET
SCL
SDA
A2
A1
A0
IO7
IO6
IO5
IO4
IO3
IO2
IO1
IO0
REL-04_H
REL-05_H
REL-03_H
REL-02_H
REL-01_H
REL-00_H
REL-06_H
D5
STM32L451
SCL1 PB8
SDA1 PB9
PC12
PB5
PD2
PB6 CMP2P
PH0-HSI
PA7 ADC1.12
PC3 ADC1.4
PA6 ADC1.11
PC2 ADC1.3
PC5 ADC1.14 CMP1P
PB0 ADC1.15
PC4
DAC1.1 PA4
SCL-REL
SDA-REL
DIAG_H
SEH_H
SEL_H
RST-REL_L
R19
15k
R20
15k
FAULT_L
TPS-A_I
TPS-B_I
TPS-C_I
TPS-D_I
USV_V
VLED_V
VLED-SD_H
VLED-TRIM
D1
PCA9557
REL-10_H
REL-09_H
REL-08_H
REL-11_H
REL-12_H
REL-SP_H
REL-07_H