HAMEG
Instruments

MANUAL

HM8112-2

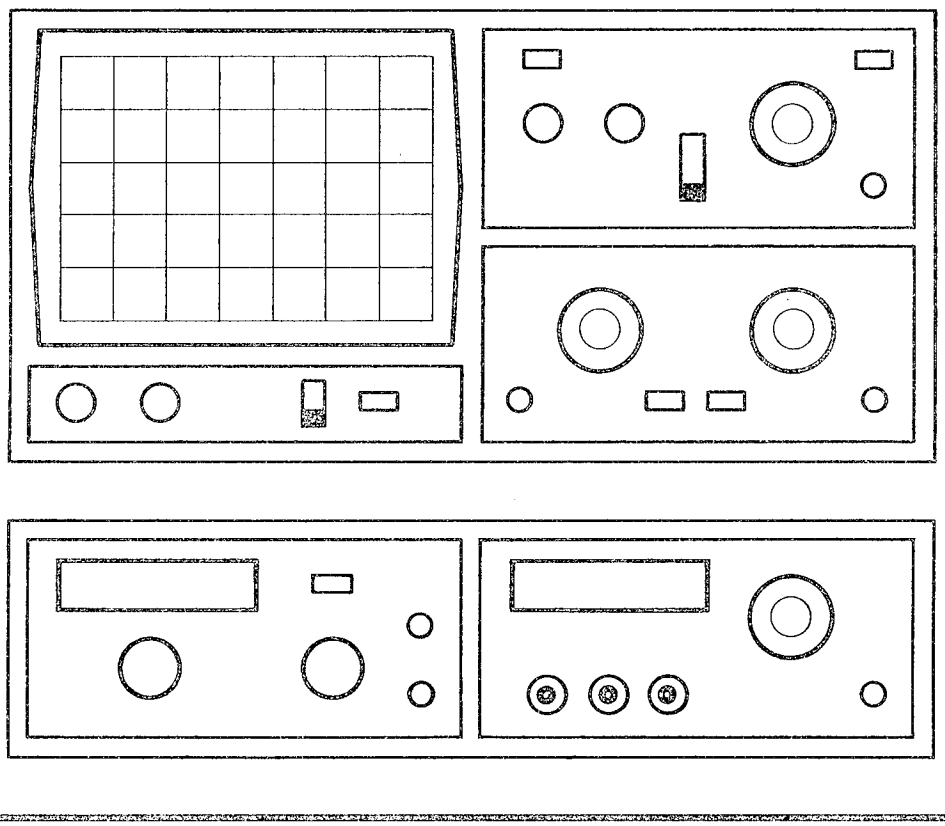

Important

As the instrument is an electrical apparatus, it may be operated only by trained personnel. Maintenance and repairs may also be carried out only by qualified personnel.

In correspondence concerning this istrument, please quote the type number and serial number as given on the type plate.

HM 8112-2

- **6½ Digit Display with 14mm LED ≙ 1.999.999 digit**
- **True RMS Measurement Capability**
- **Resolution 100nV, 1mΩ, 10nA**
- **Digital Offset Correction**
- **10 Measurements per Second**
- **Programmable Measuring Time from 0.1s - 10s**
- **IEEE-488 Bus standard**
- **Built-in Self Test Function**
- **Computing Capabilities such as Offset, dB, dBm**
- **High Input Resistance: 1GΩ (0,2V and 2V range)**
- **Electronic Calibration via Keyboard or IEEE-488 Bus for all Ranges**
- **Automatic or Manual Range Setting**
- **Built-in 4-pole 10-Channel Scanner (Model HM8112-2S)**
- **Trigger Input for Manual or Controlled Triggering**
- **Temperature Measurement with 0.01°C resolution**
- **4-Wire Resistance Measurement**

The **HAMEG HM8112-2 6½ digit multimeter** is an excellent instrument for either benchtop or automated system applications. The unit can measure a signal to the precision of **1999999** digits and can resolve voltages as small as **100nV** DC. True RMS values are measured on AC signals through DC-coupled circuitry. A separate guard connection ensures a high common-mode rejection. This instrument combines excellent accuracy with seven high-performance measuring functions, keeping operation extremely easy and straight forward. Resistance measurement can be made as a **2**- or **4**-wire measurement with a resolution down to **0.001Ω**. Separate digital offset and zero functions allow measurements referenced to a user-defined baseline as well as compensation of offset values at any time via the front panel. Temperature measurements are possible with a **PT-100** sensor in 4wire configuration.

Measurement results as well as any selected data can be retrieved via the built-in **IEEE-488 interface**. It also allows for remote control and monitoring of all of the multimeter's functions including **digital calibration**. A choice of integration times (**100ms, 1s, 10s**), as well as **5½** or **6½-digit display** can be made. In "talk only" mode, measurement results and instrument settings can be down-loaded to a "listen-only" device. In the trigger mode individual measurements can be initiated through a separate trigger input on the instrument's rear panel or via the **IEEE-488 interface**.

Extensive power-up **self-test** routines verify internal analog and microprocessor circuitry, giving a clear indication of any error detected. The easy to use firmware of the **HM8112-2** enables the measured value to be displayed as %-value, corrected with an offset or converted to **dB**.

The **HM8112-2** is also available with a built-in **10-channel** 4-pole scanner (HM8112-2/S) for applications that require multiple measurement points. Channel selection is possible via front panel or **IEEE-488 interface** where individual channels may vary their measurement functions. The switching contacts of the scanner are low-resistance (<20mΩ) and low in thermo-electric voltage (<1µV).

The **HM8112-2** is ergonomically designed and features rapid single button function range selection, as well as easy operation.

Specifications HM 8112-2 (Ref. temp.: 23°C±1°C)

DIRECT VOLTAGE V_{DC}

Ranges: ±0.2V, ±2V, ±20V, ±200V, ±1000V[2]

Accuracy: [3] [4]

	24h, 23±1°C		1year, 23±5C		Temperature Coefficients[5]	
Range	% rdg.	% f.s.	% rdg	% f.s.	±[%rdg.+%f.s.]	
±0.2V	0.002	0.0007	0.006	0.0007	0.0006	0.00015
±2V	0.002	0.0005	0.005	0.0005	0.0003	0.0001
±20V	0.002	0.0005	0.005	0.0006	0.0003	0.0001
±200V	0.002	0.0005	0.005	0.0006	0.0003	0.0001
±1000V	0.002	0.0005	0.005	0.0005	0.0003	0.0001

Integration Times: 0.1sec. 1+10sec.
Fullscale: 199.999 1,999.999
1000V Range 100.000 1,000.000

Resolution: 1µV 100nV
Input Resistance: ±0.2V, ±2V 1GΩ
±20V, ±200V, ±1000V 10MΩ

Zero Stability: Temperature drift less than 0.3µV/°C
Long term stability better than 5µV in 90 days

Measuring gaps: None. 125ms for range or function changes.

Overload Protection: (between „V/Ω-HI" and „V/Ω-LOW")
±0.2V, ±2V ranges: for 60sec. ±1000V[2]
continuous ±700V[2]
±20V, ±200V, ±1000V ranges continuous ±1000V[2]
Between „V/Ω-LOW" and GUARD 50V DC or AC_{peak}
Between GUARD and case 200V DC or AC_{peak}[2]

Interference Rejection
(Measured by increasing the peak-peak interference signal level until a display error of 1 digit results with 1sec. measuring time).
Series mode interference rejection
50Hz/60Hz power line frequency ..... : better than 60dB
Common mode interference rejection (connected to one input terminal via low resistance path, 1kΩ inserted in series with one input lead)
DC or 50/60Hz ..... : 140dB

ALTERNATING VOLTAGE V_{AC}

Ranges: 0.2V, 2V, 20V, 700V[2]

Conversion Method:
True RMS value with DC coupling of the input.

Input Resistance: 10MΩ II <60pF

Transient Response Time: 0.5s to 0.1% rdg.

Overload Limits:
Input V/Ω : ±1000V_{peak} or 700V_{rms} with the restriction of 10^7VxHz[2]
Between GUARD and case : 200V peak[2]
Between „V/Ω-LOW" and GUARD : 50V peak

Accuracy: ±[% of reading (% rdg.) + % of full scale (% f.s.)][1] (1 year, 23°±5°C)

Range	DC-20Hz	20Hz-10kHz	10kHz-50kHz	50kHz-100kHz
0.2V	0.5+0.07	0.3+0.1		
2V	0.5+0.07	0.3+0.1	1+0.4	3+0.4
20V	0.5+0.07	0.3+0.1	1+0.4	3+0.4
200V	0.5+0.07	0.3+0.1	3+0.4	8+0.4
700V	0.5+0.07	(DC - 100Hz)		

Temperature Coefficient:
10°C to 18°C and 28°C to 40°C / x2 at 0—50°C

Freq. (kHz)	±[% rdg. + % f.s.] /°C	
0-20	0.01	0.004
20-100	0.04	0.005

Integration Times: Selectable 0.1; 1; 10 seconds
Full Scale: 199.999 (700.00 in the 700V range)
Crest Factor: 7:1 peak value (max. 1.5xf.s.)

CURRENT

	mA_{DC}	mA_{AC}
Ranges:	±2mA, ±2A	2mA, 2A
Integration Times (sec.):	0.1; 1; 10	0.1; 1; 10
Full Scale / Resolution:	199.999/10nA	199.999/10nA
Accuracy: (1 year, 23±5°C) [4]	DC	20Hz - 10kHz
Ranges 2mA and 2A	0.01+0.005	0.2+0.07
Temperature Coefficient: [1] [5]	0.002+0.001	0.01+0.004
Maximum Burden[6]**:** Range	2mA:<10mV;	2A:<600mV
Overload Limits:	250V (3A fuse protected) [2]	
Crest Factor:	7:1 (Peak value max. 1.5 f.s.)	

Transient Response Time: 0.5sec. to reach final value within 0.1%

RESISTANCE kΩ

Integration Times: 0.1sec. , 1sec., 10sec.
Full Scale/Resolution: 199.999/1mΩ 1,999.999/1mΩ
1,200.000 (10MΩ range)

Accuracy: [3] [4]

	24h, 23±1°C		1year, 23±5°C		Temperature Coefficients[5]	
Range	% rdg.	% f.s.	% rdg.	% f.s.	±[%rdg.+%f.s.]	
200Ω	0.002	0.001	0.005	0.002	0.002	0.0005
2kΩ	0.002	0.0005	0.005	0.0005	0.0015	0.0005
20kΩ	0.002	0.0005	0.005	0.0005	0.0015	0.0005
200kΩ	0.002	0.0005	0.005	0.0005	0.0015	0.0005
2MΩ	0.002	0.0005	0.005	0.002	0.002	0.0005
10MΩ	0.01	0.003	0.05	0.006	0.01	0.0005

Current through measured resistor:

Range		
	200Ω, 2kΩ	0.7mA
	20kΩ	70µA
	200kΩ	7µA
	2MΩ,10MΩ	0.7µA

Open circuit terminal voltage: 14V max.
Overload limit: ±300V_{peak} (125V_{peak} with Scanner)

TEMPERATURE

4 wire resistance measurement (PT100/IEC751)
Range: –200°C to +850°C
Resolution: 0.01°C; Measurement current is 1mA, nominal
Tolerance: ±0.05°C (1 year, without counting probe tolerance)
Temperature coefficient: 10°C - 18°C, 28°C - 40°C <0.001°C/°C
0°C - 10°C, 40°C - 50°C <0.002°C/°C

SCANNER/MULTIPLEXER

Channels/Contacts per Channel/Function: 10 / 4 / 1 of 10
Thermoelectric EMF: Less than 1µV after 90min. warm-up
Max. Voltage: 125V_{peak} or 10^6VxHz (whichever is less)
Max. Switch Current: 3A

IEEE-488-BUS INTERFACE

Supported IEEE-488-Bus Functions:
SH1/AH1/T5/L3/RL1/DC1/DT1/SR1
Output Data: Numerical data for measurement result, function, range, and integration time.
Input Data: Function, range, integration time, start command, nominal calibration value..

GENERAL

Warm up time: typ. 90min. to specified accuracy.
Power requirements: 110/220V±15%; 45-60Hz; 17VA
Ambient temperature: –40°C to +70°C (storage)
+10°C to +40°C (operation)
Humidity: 10%-75%, no condensation
Dimensions: 285x85x365mm (WxHxD). **Weight:** approx. 4kg
Safety: Class I, according to IEC 348

---

[1] Shield connected to „V/Ω-LOW" input socket, sinusoidal signal greater than 5% of full scale.

[2] Max. 125V_{peak} with a max. 10^6VxHz when the scanner is incorporated.

[3] ±[% of reading (% rdg.) + % of full scale (% f.s.)]

[4] ±1 Digit after offset correction (rdg. = reading / f.s. = full scale)

[5] 10°C to 18°C and 28°C to 40°C/x2 at 0°C-50°C

[6] Burden is the voltage across any external load shunt

Accessories

HZ10: Silicon test leads; **HZ15:** Silicon test leads with test probe and sheathed banana plug; **HZ819:** Kelvin probes (gold plated); **HZ887:** Temperature probe (PT100) **HZ42:** 19" rack mount kit; **HZ72-S/L:** Double shielded IEEE-488-Bus cable, 1m/1.5m.

Subject to change without notice

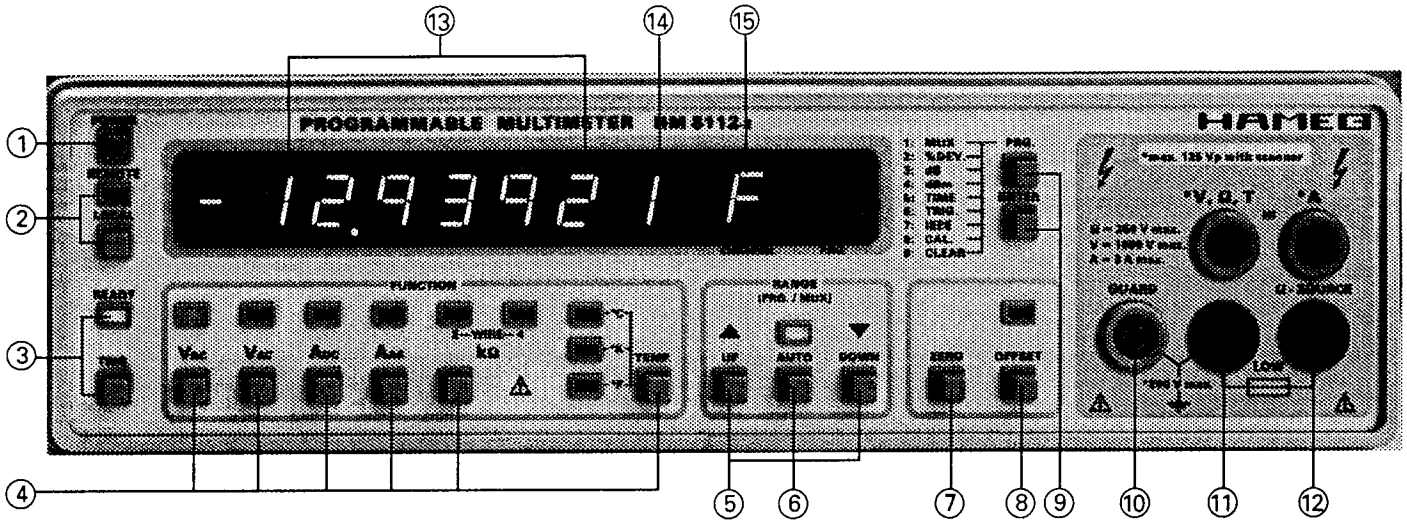

① **POWER**
Power switch; mains connector at rear side.

② **REMOTE/LOCAL** (Pushbutton/LED)
The remote-LED is lit when the instrument is operated via the IEEE-488 bus. Return to local by actuating the local-switch is possible, provided the instrument is not in "Local lockout state".

③ **TRG./READY** (Pushbutton/LED)
Pushbutton for manual triggering of the HM8112-2. The LED "Ready" indicates that the unit is ready for measurement.

④ **FUNCTION** (Pushbuttons and LEDs)
Pushbuttons for activating the desired measuring function.

⑤ **UP/DOWN** Range selection.

⑥ **AUTO** (Pushbutton)
Pushbutton for activating the autorange function.

⑦ **ZERO** Pushbutton for activating the "Zero-correction"-function.

⑧ **OFFSET** (Pushbutton/LED)
Activates the "Offset"-function.

⑨ **PRG./ENTER** (Pushbuttons)
Pushbuttons for selection and activation of internal programs.

⑩ **GUARD** (4mm banana socket)
Shield to obtain a high common mode rejection.

⑪ **V, Ω, T** (4mm banana sockets)
Input for voltage, resistance, and temperature measurements.

⑫ **A** (4mm banana sockets)
Input for current measurement and source terminal for 4-wire resistance and temperature measurements.

⑬ **Display** (7segment LEDs).

⑭ **CHANNEL** (7segment LED)
Readout for selected scanner channel.

⑮ **PRG.** (7segment LED)
Readout for selected internal program.

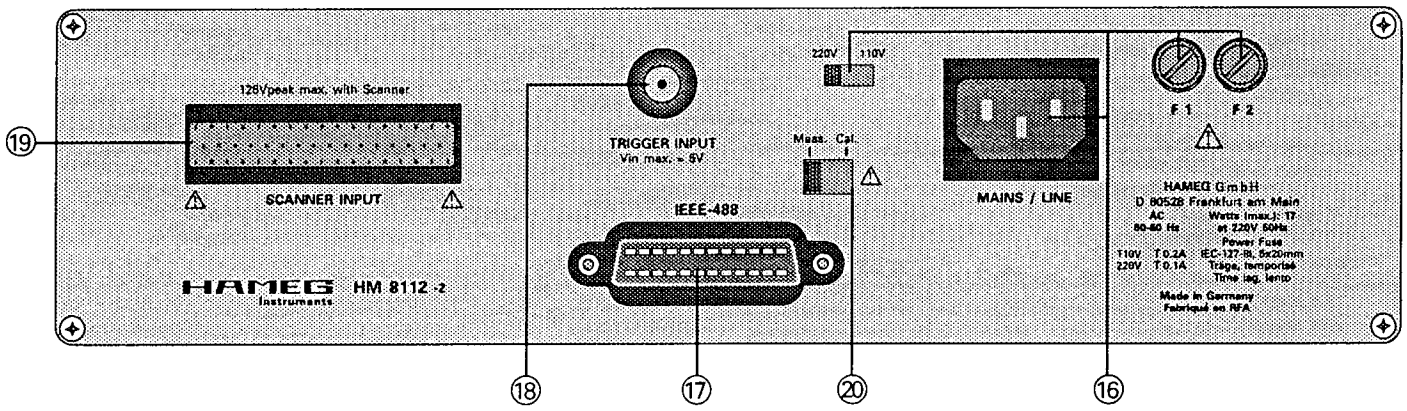

⑯ **MAINS/LINE**
Mains connector, line voltage selector and fuses.

⑰ **IEEE 488**
IEEE-488 interface connector.

⑱ **TRIGGER INPUT** (BNC socket) Input for external triggering.

⑲ **SCANNER INPUT** 50 pole sub D connector (Option).

⑳ **Meas. - Cal.** (Slide switch)
Selector between measurement mode and calibration mode.

General Information

The operator should not neglect to carefully read the following instructions, to avoid any operating errors and to be fully acquainted with the instrument when later in use. After unpacking the instrument, check for any mechanical damage or loose parts inside. Should there be any transportation damage, inform the supplier immediately and do not put the instrument into operation.

Safety

This instrument has been designed and tested in accordance with ***IEC Publication 1010-1, Safety requirements for electrical equipment for measurement, control, and laboratory use***. It corresponds as well to the CENELEC regulations EN 61010-1. All case and chassis parts are connected to the safety earth conductor. Corresponding to Safety Class 1 regulations (three conductor AC power cable). Without an isolating transformer the instrument must be plugged into an approved three contact electrical outlet, which meets International Electrotechnical Commission (IEC) safety standards.

Warning!
Any interruption of the protective conductor inside or outside the instrument or disconnection of the protective earth terminal is likely to make the instrument dangerous. Intentional interruption is prohibited.

The instrument must be disconnected and secured against unintentional operation if there is any suggestion that safe operation is not possible. This may occur:

- if the instrument has visible damage,
- if the instrument has loose parts,
- if the instrument does not function,
- after long storage under unfavourable circumstances (e.g. outdoors or in moist environments),
- after excessive transportation stress (e.g. in poor packaging)

When removing or replacing the metal case, the instrument must be completely disconnected from the mains supply. If any measurement or calibration procedures are unavoidable on the opened-up instrument, these must be carried out only by qualified personnel acquainted with the danger involved.

Symbols As Marked on Equipment

⚠ **ATTENTION - refer to manual**

⚠ **Danger - High voltage**

⏚ **Protective ground (earth) terminal**

Warranty

Before being shipped, each instrument must pass a 24 hour quality control test. Provided the instrument has not undergone any modifications HAMEG warrants that all products of its own manufacture conform to HAMEG specifications and are free from defects in material and workmanship when used under normal operating conditions and with the service conditions for which they were furnished.

The obligation for HAMEG shall expire two (2) years after delivery and is limited to repairing, or at its option, replacing without charge, any such product which in HAMEGs sole opinion proves to be defective with the scope of this warranty.

This is HAMEGs sole warranty with respect to the products delivery hereunder. No statement, representation, agreement or understanding, oral or written, made by an agent, distributor, representative or employee of, which is not contained in this warranty will be binding upon HAMEG, unless made in writing and executed by an authorized HAMEG employee. HAMEG makes no other warranty of any kind whatsoever, expressed or implied, and all implied warranties of merchantibility and fitness for a particular use which exceed the aforestated obligation are hereby disclaimed by HAMEG be liable to buyer, in contract or in tort, for any special, indirect, incidental or consequential damages, espresses, losses or delays however caused.

In case of any complained, attach a tag to the instrument with a description of the fault observed. Please supply name and department, address and telephone number to ensure rapid service.

The instrument should be returned in its original packaging for maximum protection. We regret that transportation damage due to poor packaging is not covered by this warranty.

Installation

This instrument is intended for connection to 220V or 110V, 50/60Hz mains input voltage. Before installing the instrument, ensure that it is set to the local line voltage. On delivery the unit is set to either 110V or 220V, as indicated on the line voltage selector on the rear panel. If the line voltage setting is incorrect, set the line voltage selector in accordance with the local line voltage before connecting the instrument to the line.
The instrument is protected by two primary fuses. These have to be changed when the line voltage changes.
For 220V / 110V use delayed action fuses. Remove the line plug before fitting the fuses. Ensure that only fuses of the specified type are used.

Range selection

Range selection is automatic when the "Auto" key has been pressed, or manual with the range keys. When the "up" or "down" key is pressed, the autoranging function is switched off and the active range is switched one step up or down for each keypress.

The autoranging function makes a preliminary decision within the first third of the set measuring time, whether the active range is the correct one. The brief measurement takes 200 ms and produces no service request when SRQ is selected. If the set range is retained after the preliminary decision, then two further checks are made after elapse of the complete measuring time:

1. The next higher range is selected if the range limit is reached or exceeded.

2. If less than 8% of the set range is reached, then the next lower range is selected. The next measurement then commences in the new range 100 msec after switchover.

Digital Display

The measurement results and error messages are shown on the display of the HM8112-2. Certain operating modes of the multimeter are indicated here too, e.g. the selected programm (digit 15) or the activated scanner channel (digit 14).

Self-Test

The HM 8112-2 executes an automatic self-test on power-up. Progress of the individual test routines is indicated in the display by the message "Contr.1-3". **No voltage greater than 300 V should be present at the input sockets during self-test.** If an error occurs during the self-test, this error is reported by a corresponding error message and the multimeter aborts further execution of the self-test. To resume execution of the self-test routines press any key.

Contr. 1 initializes the DMM and checks the analog section.
Contr. 2 checks the battery backed-up RAM
Contr. 3 checks the program ROMs

Error Messages

The DMM recognizes the following error situations caused by incorrect operation or manual control. They are reported in the main display or via the IEEE-488-bus with the designation "Error" and a code number. The code numbers have the following meanings:

1 - Overflow for measurement: Reading exceeds the range
2 - Overflow calculation: Calculated result exceeds the range
4 - Error during offset measurement: The offset is too large
5 - Error during calibration:
5.1 Nominal value <5% or >100% of range
5.2 Calibration switch on the rear of the unit is set to "MEAS".
6 - IEEE 488 bus interface error: The DMM has received a message string containing more than 32 characters.
8 - Error 2 during self-test : The redetermined and the old check sum do not agree (lithium battery exhausted).
9 - Error 3 during self-test : Error in the program ROMs.

Zero-Correction / Offset

Zero point displacement (drift) is one possible source of error. Normally this type of error is immediately evident by a display reading differing from Zero when the input is shorted at VDC ranges. A zero point correction can be made with the "**Zero**" key.

For this purpose place a short circuit at the "V/Ω" input and then press the "Zero" key. The instrument makes a zero point measurement whose duration is determined by the set integration time. With 6½ digit display, the zero point measurement takes 20 seconds for the functions "V_{DC}", "mA_{DC}", during which time the display shows "null" and the remaining time in seconds until the end of the measurement. With 5½ digit display, the zero point measurement takes 2 seconds and only the text message "null" appears in the display. The keyboard is disabled during the correction measurement.

The maximum possible zero correction is 1% of the measuring range!

If the deviation exceeds this limit, then the message " Error 4 " appears in the display or on the IEEE-488-bus, and the old correction value is preserved.

The sequence of the correction measurement differs slightly from the description given above, for the functions "KOhm", "V_{ac}" and "mA_{ac}". For these functions the zero point is corrected immediately by continual observation of the measured value. If autoranging was switched on before calling the "zero point correction", all ranges of one function are corrected in succession for zero point. Now the zero point measurement takes 10 seconds for each 6½ digit display span, and 1 second for each 5½ digit display span. When the measurement duration is 10 seconds, the display shows "null" and the remaining time. When the measuring time is 1s, only the text message "null" appears in the display.

For the current measuring ranges, the zero point is corrected with open-circuit sockets, because of an active current sink circuit!

No short circuit is placed internally in the multimeter for the offset correction, so that the user can place the short circuit at any desired location in the external circuit, to include external error sources in the compensation. This is particulary important for the 2-wire resistance measuring function. The error due to the finite resistance of the measuring leads can be eliminated by the zero-point correction.

Greater deviations than 1% can be corrected by activating the "Offset"-function.

In this case the precedented display value is subtracted from the actual measurement and only the calculated value is displayed. The function "Offset" is active as long as no other function is selected or by actuating the "Offset"-key a second time.

Operation Instructions for V_{DC}

Connect the voltage to be measured to the two input terminals marked "V/Ω/T" and "ground" on the front panel. A voltage which is positive at the red socket relative to the black socket gives a positive readout in the display. Make sure that the maximum permitted values of $50V_{DC}$ between the "LOW" input and guard (see section "shielding"), and 200 V_{DC} or peak-peak AC between guard and case, are not exceeded.

Input resistance in DC ranges

In order to make full use of the excellent linearity of the measuring method of the HM 8112-2, the input resistance for voltage measurement is extremely high in some ranges. For example, this still permits relatively accurate measurements up to +/-2V even when the internal resistance of the measured voltage source is 100 kΩ. In the 20 V, 200 V and 1000 V_{DC} measuring ranges, 100 Ω internal resistance of the measured voltage source already give an error of 1 digit when using 100,000 digits resolution (input resistance of the DMM 10 MΩ). For input resistance, display span and resolution see the following table:

Range	Display span	Input Resistance	max.Resolution
0.2 V	.2000000 V	1 GΩ	100 nV
2 V	2.000000 V	1 GΩ	1 µV
20 V	20.00000 V	10 MΩ	10 µV
200 V	200.0000 V	10 MΩ	100 µV
1000 V	1000.000 V	10 MΩ	1 mV

Overload Protection

All ranges are effectively protected against destruction by voltages greater than the full-range value. The max. overload is:

±0.2V,±2V ranges: ±1000V for 60 sec or ±700V cont. *

±20V, ±200V, ±1000V ranges: ±1000V continuous *

* only 125V when scanner is equipped

However, bear in mind that overloads in the lower ranges will inevitably cause heat-up of the safety resistors and diodes, so that subsequently thermoelectric voltages may cause a zero displacement until internal temperature equilibrium has been reestablished.

Common mode supression / Shielding

Common mode voltages are voltages which occur between the low point of the voltage to be measured and mains (power) ground, or between power ground of the voltage source and ground potential of the measuring unit. Common mode voltages attempt to generate currents in the same direction via both input sockets. To achieve an optimum shielding effect, connect the guard input to a DC-voltage potential equal to that of the "LOW" input such that currents flowing in the shield do not flow through resistances in the voltage source circuit and voltage measuring leads, which could disturb the voltage being measured.

A high rejection factor for direct voltage and common mode voltage can be obtained in critical cases by appropriate connection of the guard input. If problems due to common mode voltage are expected in a given measuring task, then the guard input (blue socket) should be strapped to the "LOW" input (black socket).

The common mode rejection of a measuring unit is the capability of indicating only the wanted difference signal between the "HI" and "LOW" input, with ideally complete supression of any response to a common voltage which both input terminals may have with respect to ground. Whereas an ideal system would give no response to a common mode signal, so that it would show no error due to this cause, in a practical system stray capacitances, finite insulation resistance and resistive circuit asymmetry will convert a portion of the common mode voltage to a series voltage. The common mode rejection factor of the HM 8112-2 is better than 140 dB even when the resistive asymmetry of the measuring leads has any value up to 1 kΩ.

Operating Instructions for Ω/kΩ

Resistance measurements with the HM 8112-2 are made according to the following principle: A load-independent current (I) is passed through a resistance (Rx) which is to be measured. This current also flows via a known internal range resistor. The voltage drop across Rx is measured via the input sockets "V_{DC}" and the ratio of this voltage drop to the voltage drop across the internal range resistor is determined. Thus any drift or ageing of the reference voltage source has no effect on the accuracy of the resistance measurements.

The HM 8112-2 makes resistance measurements in 2-wire circuit or in 4-wire circuit. For measuring small resistances too with high accuracy, careful compensation of the measuring lead resistances and of thermoelectric EMFs is required, with the aid of the zero point correction facility. For this purpose connect the two measuring leads with their test clips to one side of the resistor to be measured, and then make offset correction by pressing the "Zero" key. This correction compensates for all possible sources of error, such as measuring lead resistance, contact resistance and thermoelectric EMFs. Shielded measuring should be used when measuring large resistances (100 kΩ or greater).

The currents through the resistance to be measured have the following values in the respective ranges:

2 kΩ-range	700 µA
20 kΩ-range	70 µA
200 kΩ-range	7 µA
2 MΩ-, 10 MΩ-ranges	0,7 µA

The polarity of the current flowing trough Rx is defined such that the end of Rx which is connected to the upper "HI" socket of the "V/Ω" input has a negative potential with respect to the other end of Rx.

Subject to change without notice

Operating Instructions for V_{AC} Measurements

The HM 8112-2 measures the "True-RMS" value of the input voltage, i.e. the RMS value of the applied DC and AC voltage.
A recommenced arrangement for measuring alternating voltages consists of a two-conductor shielded cable with the shield connected to the "guard"-input. For all measurements, the "guard" and the "V/Ω-LOW"-input should be connected to the measuring point which lies closest to ground potential.

Somewhat poorer shielding is achieved by using a single coaxial cable and establishing a link between the "guard" and the "V/Ω-LOW"-input. This often used arrangement is nevertheless satisfactory for most measurements except in very high ambient noise levels and/or when measuring very small voltages.

In the 200 V and 1000 V ranges and when measuring alternating voltages with high frequencies (above 100kHz for 200V range, above 10kHz for 1000V range), it must be ensured that the applied AC voltage does not exceed the RMS value product of 10^6V x Hz.

When measuring alternative voltages or currents a constant zero point offset due to the "calculated conversion principle" occurs. This offset is eliminated by setting the display to zero when the measured signal is smaller then 200 digit. This doesn't affect the measurement accuracy of the instrument (see specifications for AC-values). The specification are valid for sinusoidal input signal greater then 5% of full scale and the shield connected to the "V/Ohm/T"-input socket. This holds also for the mA_{AC} ranges.

Measuring mA_{DC} and mA_{AC}

When connecting the measuring circuit to the DMM, bear in mind that the two black "LOW"-sockets of the inputs "V/Ω" and "A" are connected together internally. Thus it is not possible to connect simultaneously two measuring leads for current measurement and two leads for voltage measurements, if there is a potential difference between the respective measuring points. The internal connection between the "V/Ω" socket and the "A"-"LOW" socket is protected against current overload by a 3.15A fuse (slow blow).

Offset correction by keypress is possible for the current measuring ranges too. But in contrast to all other functions, the offset correction for current measuring ranges must be made with the input sockets open circuit.

A 0.1 Ω shunt is used in the 2A range. But in the 2 mA range a current compensation circuit is used which permits load voltages smaller than 10 mV. The current measuring ranges are protected by power diodes and an additional quick blow 3.15A fuse.

Attention

Before replacing blown fuses, disconnect the mains plug and all measuring cable plugs. The 3A (quick blow) fuse is located near the input sockets of the instrument and the 3.15A (slow blow) fuse is located close to the large blue 0.1 Ω shunt at the front right inside the HM8112-2.

Temp. Measurements °C,°F, Kelvin

Temperature measurements with the HM 8112-2 are performed with the aid of a PT-100 temperatur sensor. As accessory, HAMEG supplies an immersion test probe with colored (red and black) connectors (HZ 87). These must be attached so that the colors line up. It is connected in 4 pole configuration to the inputs "V/Ω/T"-HI/LOW and "Ohm-source"-HI/LOW input sockets.

The temperature is measured indirectly by means of a 4-wire resistance measurement. The test current is approx. 1mA. The resistance thus measured is compared with a table which complies with IEC 751 and is stored in the DMM for conversion to the corresponding temperature in °C,°F, or Kelvin.

A zero point correction can also be performed for temperature measurement. Because of the conversion and linearization which are subsequently performed, the sequence used for adjustment differs slightly from that for the other functions. Each of the inputs "V/Ω/T"-HI/LOW and "Ω-source"-HI/LOW is shorted. In response, the HM 8112-2 reports "ERROR1". If the "Zero" key is now pressed a zero point correction is performed. Afterwards the message "donE" appears in the display.

In continuation, the sensor can now zero-adjusted at a precisely known temperature or with the aid of a reference resistance, the value of which is precisely known. Adjustment is performed by calibrating to this precisely known value. At this point, it is the linearity of the sensor which determines the accuracy of temperature measurements over the entire temperature measurement range, taking into account the base error of the HM 8112-2, namely ±0.05 °C.

Operating Instruction for Scanner/Multiplexer (Option)

When the DMM is equipped with the scanner option, the maximum permitted voltage at the subminiatur type D 50-pole socket on the rear or at the "V/Ω"-input sockets, is 125V peak-peak, with the restriction for the RMS product to be lower than 10^6V x Hz.

WARNING

The optional Scanner is equipped with bistable relays, whose contacts are in arbitrary state when the power supply is switched on or off. This may short-circuit measured signals in an uncontrolled manner and without due precautions this might damage your measuring circuit or the scanner. Thus it is very important to make sure that the unit is switched on or off only when no measuring cables are connected if the signal sources can deliver voltages or currents which exceed the limit values specified in the technical data for the HM 8112-2. We expressly point out that we accept no liability for consequential damage. Damage to the relay contacts is also not covered by our warranty obligations.

The multiplexer is of type "1 of 10", i.e. one freely selectable channel at a time can be connected through. The inputs are collected on a 50-pole subminiature type D socket connector mounted on the rear of the unit. The 4 output lines of the multiplexer are connected internally to the multimeter input terminals "V/Ω" and "A". The front terminals too can be switched-in and switched-out via the IEEE 488 bus interface. The front terminals are in switched-in state immediately after power-up of the DMM. A shield is provided separately for each multiplexer channel and is connected to the "guard" terminal on the front of the unit and to pin 1 of the subminiature type D socket connector. An adapter card (HZ 81) is also available which plugs onto the subminiature socket connector and provides screw terminals for the multiplexer inputs. For channel selection see "HM 8112-2 firmware".

EXTERNAL TRIGGERING

Switch-on and switch-off of the external trigger facility is made with the "up" key as soon as the program 6 (TRG.) is activated. The display shows "trig on" or "trig off", after alternate actuations of the "up" key. Deressing any other key exits the program and the last displayed status is taken over. If start mode has been chosen, then the actual measured value appears in the display.

The HM 8112-2 can be triggered for a single measurement via the BNC-Connector on the rear panel or by means of the trigger key. Another start mode under software control is posible too, via the IEEE-488-bus. All start modes have the same time sequence. The start time is the positive slope of a trigger pulse with a time delay not exceeding 25 ms.

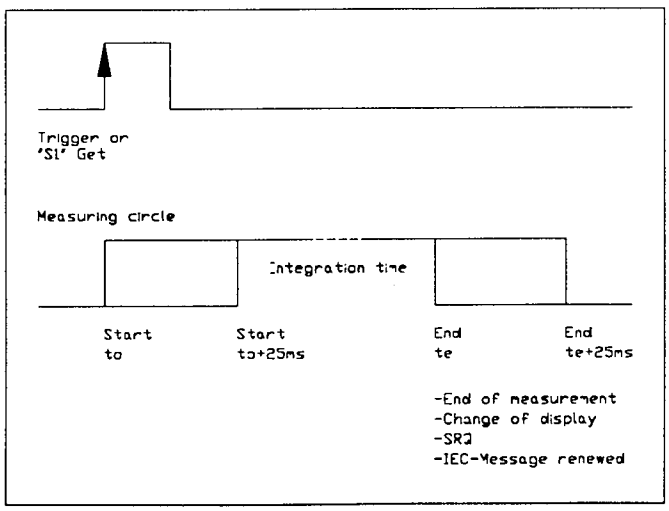

Via the IEEE bus, the DMM is placed in start mode by the command "S1". Each further transmission of "S1" then corresponds to a trigger as described above. The HM 8112-2 can also be started by the addressed command GET (Goup Execute Trigger). The display and the IEEE message are refreshed at the end of the measuring time. If service request is switched on, the SRQ line is activated. In "**TALK ONLY**" mode, the DMM sends a message to a connected device in "**LISTEN ONLY**" mode. Range and function switching operations carried out shortly before triggering may lead to delay times of up to 225 ms.

HM 8112-2 Firmware

The HM 8112-2 features programs for comfortable operation.

PRG 1	MUX	Controls the optional scanner
PRG 2	%Dev	Calculates deviation between measured values in %.
PRG 3	dB	Calculates deviation between measured values in dB.
PRG 4	dBm	Calculates the measurement result in dBm.
PRG 5	Time	Setting of integration time and resolution
PRG 6	TRG	Control for the external trigger facilities
PRG 7	IEEE	Setting of device adress and termination
PRG 8	Cal	Calibration routine
PRG 0	Clear	Resets the DMM

The utility programs are selected using the PRG key (or via the IEEE-488 bus). When the utility programs have been activated, the letter "P" appears in the display. Each time the "PRG" key is pressed the program selector advances one position. Once the desired program has been reached, the selection is confirmed by pressing the Enter key. The number of the selected program can be read in the display (digit 15). If more than 4 seconds are allowed to elapse between selection of a program and confirmation by pressing the Enter key, the HM 8112-2 exits this mode and returns to the previously selected operating mode.

PRG 1 - Scanner (Option)

When selecting PRG 1, full control of the optinal scanner is possible by the front panel. After activating the program (PRG 1 + **Enter**) a new channel can now be selected with the range keys. The 10 channels are numbered consecutively from 0 to 9. Between channels 9 and 0 "F" appears in the display in order to indicate the state multiplexer disabled. The front-panel jacks can also be addressed within this program. After selecting a channel (the number of the channel appears in digit 14 of the display) it is confirmed by pressing the **Enter** key. Pressing any other key also causes the newly selected channel to be activated, but results in termination of this program. Channel selection is also possible via the IEEE 488 bus interface using the command "**MX**".

PRG 1 permits complete sequences to be stipulated for the scanner, with appropriate measurement function, range and integration time in each case. The combinations thus stipulated for the individual channels are stored in the memory of the HM 8112-2, and remain stored until power down. In order to execute a measurement which has been programmed in this way, it is necessary only to call the corresponding channel. After carrying out the following programming sequence, the corresponding combinations are stored for the selected channel.
PRG1 - Enter; select channel with Up/Down keys; Enter; function - range - measurement time; PRG1 - Enter; Enter.

PRG 2 - %Dev Calculates, as a percentage, the deviation of the current measurement value from the previous value.

$$R = 100 \times (X-C)/C$$

Where R is the calculated value which is displayed, and C is a constant reference value (previous measured value). A

Subject to change without notice

measured value is assigned to the variable C by the program if the Enter key is depressed within 4 seconds after depressing the PRG key.

PRG 3 - dB Calculates the current measurement value by applying the formula:

$$R = 20 \times \log (X/C)$$ (see PRG 2)

Where R is the calculated value which is displayed, and C is a constant reference value. A measured value is assigned to the variable C by the program if the Enter key is depressed within 4 seconds after depressing the PRG key.

PRG 4 - dBm Calculates the deviation of the current measurement value from the previous measurement value by applying the formula:

R = 20 x log (X/C) C= 0.775 V into 600 Ω for voltage
C= 1,29 mA for current

PRG 5 - Time The "**up**" and "**down**" keys are used to set the integration time. The following meas. times are available:

0.1 sec.	100 ms integration time,	display 5½ digit
1 - 5 sec.	1 s integration time,	display 5½ digit
1 - 6 sec.	1 s integration time,	display 6½ digit
10 sec.	10 s integration time,	display 6½ digit

Pressing any key or "**Enter**" exits this program and the integration time indicated in the display at this instant gets active.

PRG 7 - IEEE When activating PRG 7 the DMM is then in status "set device address". The display shows e.g. "IEEE.07.8" which means that the unit is set at present to device address 7 and end character type 8. The DMM is set like this as delivered from the factory. The "07" in the display is flashing, to indicate that the device address can now be changed. Use the "up" key to change the device address. The first actuation of this key starts a cyclic run-through of device addresses from 01 to 30. After address 30 the characters "—" appear in the display for operating status "**TALK ONLY**". The process is stopped by pressing the "up" key again. To select the end character by its designation number, press the "down" key. The digit after the decimal point now flashes, indicating that the end character can now be changed. Selection of one of nine possible end characters is made with the "up" key in the same manner as for selecting the address.

Designation number	Terminating charakter
0	CR + EOI
1	CR
2	LF + EOI
3	LF
4	CR + LF + EOI
5	CR + LF
6	LF + CR + EOI
7	LF + CR
8	EOI

Press any key except a range key to transfer this address information into working memory and exit the program. If it is desired to take over these new settings into protected memory, set the calibration switch on the rear of the DMM to position "Cal" before takeover of the address data.

DO NOT FORGET TO RETURN THE CALIBRATION SWITCH TO POSITION "MEAS"

PRG 8 Calibration routine

IEEE 488 - Bus - Interface

Capabilities of the IEEE 488 bus interface

SH1	Handshake source function
AH1	Handshake sink function
T5	Talker function
L3	Listener function
RL1	Remote control
DC1	Reset function
DT1	Trigger function
SR1	Service request function

The keyboard of the HM 8112-2 is disabled after the DMM has been accessed once via the IEEE 488 bus interface. The keyboard is enabled again when the "REN" becomes inactive or when the controller transmits the addressed command **GTL** (go to local).

The "**TALK ONLY**" capability in conjunction with a printer with "Listen Only" attribute, permits set-up of a self-complete measuring station. After each end of measurement (e.g. after a trigger), the DMM outputs a measured value with the selected terminating characters to the IEEE bus. The DMM does not interrupt its continuous measuring sequence within the talker function. It understands the commands DCL (Device Clear), SPD (Serial Poll Disable), and SPE (Serial Poll Enable). The command DCL sets the DMM into status "DC-Volts measurement with 1000 V range".

Programming the HM 8112-2 via the IEEE 488 Interface

To program the DMM, proceed as follows: Data input is possible as a character string of 2 to 32 characters, e.g. "VDR3A0M3Q1L1" or "VDR3" or "R3". Every command consists of 2 characters. The sequence of several commands within one string is arbitrary, with the exception of the command "NV". The ISO-7-bit code is used for command transfer. Any spaces in the transferred string are ignored. If the DMM receives more than 32 characters (excluding any spaces), then it evaluates the first 32 characters and also reports a transmission error.

Description of the device messages

VD Selects the measuring function "direct voltage"
VA Selects the measuring function "alternating voltage".
O2 Selects the "resistance" measuring function (04=4-wire).
ID Selects the "direct current" measuring function.
IA Selects the "alternating current" measuring function.
TC, TK, TF Selects the "temperature" measuring function.
RX The measuring range within each function is selected with "RX". "X" stands for the designation number of the desired measuring range. Note that some measuring ranges can be selected only in conjunction with a corresponding measuring function, e.g. R6 only for function "kΩ".

R1	Range	0,2 V_{dc},	V_{ac},	kΩ,	....	....
R2	Range	2 V_{dc},	V_{ac},	kΩ	2mA_{dc}	2mA_{ac}
R3	Range	20 V_{dc},	V_{ac},	kΩ	....	....
R4	Range	200 V_{dc},	V_{ac},	kΩ	....	....
R5	Range	1000 V_{dc},	V_{ac},	2000kΩ,	2000mA_{dc},	2000mA_{ac}
R6	Range	10000		12000kΩ	....	....

A0/A1 (A/Zero) switches off autoranging; A1 autoranging on

TX Sets the integration time and the number of digits shown in the display for the measurement result. 6½ digits are always transmitted via IEEE 488 bus.

T1 Integration time 100ms; display 5½ digits
T2 Integration time 1 s; display 5½ digits
T3 Integration time 1 s; display 6½ digits
T4 Integration time 10 s; display 6½ digits

ZO Starts an offset correction.
S0 (S/Zero) Starts the continuous measuring sequence.
S1 Stops the cont. measuring sequence. The delay until execution of the commands "S0" and "S1" may amount up to 25msec.

MO Selects a multiplexer channel. "F"= Multiplexer off
M0-M9 Selection of channels 0-9

L0 (L/Zero) Short format: The DMM transmits only the first data block (measurement data and text messages)
L1 Long format: The DMM transmits both data blocks (measurement data and text messages in first block and programming data in second block).

Q0 (Q/Zero): The multimeter transmits no SRQ.
Q1 The multimeter transmits a Service Request SRQ with: each new measurement result, each error message, reset

NVXXXXXXXX After NV the DMM expects a 6-digit unsigned decimal integer number as nominal value for calibration via the IEEE 488 bus. A nominal value for calibration must be transmitted alone, i.e. no further command from the table above may be contained in the same string. The DMM commences the calibration routine after receiving the nominal value.

P1 Display of the offset-corrected value R = X-C
P2 % Deviation R = 100 x (X-C)/C
P3 dB R = 20 x log (X/C)
P4 dBm R = 20 x log (X/C) with
C = 0.775 V into 600 Ohm for voltages and
C = 1.29 mA for current

PxEN Enter meas. value for constant x at P 2-4; X = 1,2,3

ID? sends the instruments identification string "HM8112-2"
STA? sends device status (2nd data block)

D0/D1 0=Display off; 1 = Display active

Bx Returns the code of the switch, which was depressed last. x = 1,.....9, A....F

EOI EOI active when selected

EOS1/EOS2 terminates the device message; the code 0,....8 selected determines whether the string is sent with 1 or 2 (EOS1 or EOS2) terminators.

END Terminating character(s) as selected when setting the DMM address. For terminating character No.8, EOI is transmitted together with the final (26th.) string charac.

Description of the transmitted data set

The device messages transmitted from the DMM consists also of a data set which is generated and transmitted as a block, with end specification. The data set consists of two data blocks. The first data block contains programming status data. Each data block consists of a character string with a fixed number of characters, so that no end character is required or sent between the two data blocks. The first character string contains 12 characters and the second character string contains 20 characters + terminating character(s). The ISO-7-bit code is used for transmission.

```
1st. character    13th character              32th character
     !                !                            !
    +X.XXXXXXXE+XVDR1A0T1S0Q0M0X0P0B0
                  VA 2  1 2 1  1  1  1 1 1
                  O2 .    3       . 2    .
                  04 .    4       . 3    .
                  ID 6            9 4    9
                  IA
                  TC
                  TF
                  TK              + EOI, EOS1, EOS2
        (————————)(————————————————)
          1st. data      2nd. data
          block          block
```

+/-	Sign of mantissa for VD and ID, Zero for VA,O2 and IA
X.XXXXXX	7 digit mantissa
E+X	1-digit exponent with sign
VD,VA,02,ID,IA	Measuring functions

The contents of the display is transmitted in the 12 characters of the first data block. These are measurement results and text messages. The measurement results are always transmitted right justified, i.e. termination with the 12th character.

The first character is always the sign, "+" or "-", for DC measurements. All not required leading digits before the measurement result are filled with zero. No sign is output for resistance, alternating voltage and current measurements and all not required leading digits in front of the measurement result are filled with zero. Measurement results are output in exponential form without spaces, e.g. +01.9876E+2. The text messages have the format "ERR. X", "NULL", "CAL." These messages are always left justified, i.e. they commence with the first character of the data block. All not required characters are filled with spaces (blank).
The second data block always commences with the 13th character. This data block outputs the programmed status of the DMM. Output of the second data block can be enabled or disabled with the DMM command "L1" or "L0" respectively.

Subject to change without notice

SRQ

Service request function (SR interface function)
The IEEE 488 bus interface of the DMM is equipped with a service request function (SR function, SRQ). The individual status bits transmitted with a service request have the following meanings:

Bit 1: End of measurement
Bit 3: Overflow during measurement
Bit 4: Error messages
Bit 6: Reset
Bit 7: SRQ

Bit 1, end of measurement, can appear together with the other status bits, in order not to falsify the SRQ in the case of fast measurement sequences. Bit 6 appears with a reset, i.e after power-up or in the case of a strong external source interference event. A reset always takes the multimeter to basic status (DC, 1000V, etc.), so that the controller must reprogram the DMM after detecting a reset.

Messages in "Talk-only"-mode

The transmitted data set has a fixed length of 23 bit. According to the end of string sign of the DMM the actual date and time provided by the HM8148 will be transmitted e.g. +01.93455E+1ADCM5 XX00-00-00 00-00-00 which is measurement value, channel designation, program-number (otherwise 2 blanks), date, and time.

Querying the Keyboard-code via the IEEE-488 bus

If a key is depressed while the DMM is under remote control, this does not result in the corresponding function being executed; instead, the status byte which the DMM places on the bus in response to a poll contains a code indicating the most recently depressed key. This information can be taken advantage of to permit use of the DMM as a controller in remotely controlled test systems. Interpretation on information on depressed keys is up to the program employed for operation of the system. For example, it is possible to use the keys as yes/no answers to query procedures for selection of menu numbers, or starting of test sequences.

The codes listed in the table are assigned to the keys. Each code begins with the letter "B". When a key is depressed, the IEEE-488 output buffer is updated by loading it with the corresponding key code. As soon as this message has been placed on the bus, the buffer is initialized to "BO". This fact must be taken into account when performing cyclic queries. Once the buffer has been reset to "BO", the DMM continues outputting this code in response to queries until another key is depressed. It then outputs the corresponding key code once. Once this has been read out, the DMM is again initialized to "BO" until the next key is depressed. If the SRQ function is enabled, each press of a key results in a SRQ being sent. The key assignments are as follows:

1 Local; 2 Trig.; 3 V_{DC}; 4 V_{AC}; 5 A_{DC}; 6 A_{AC}; 7 kΩ; 8 TEMP; 9 UP; 10 Auto; B Down; C Zero; D Offset; E PRG.; F Enter

Display-Mode under IEEE-control

In display mode, the computer being used to control the system can directly output texts in the display of the DMM, independently of the other device functions. Display mode is activated with "D1". The subsequently emitted ASCII characters are written into the display as text. All ASCII characters for which a segment code is defined in the "ASCII segment table" are displayed. Any other character results in an empty space. All characters arriving after "D1" and the output text are ignored. If "D1" (text) is used together with other commands in the same character string, then "D1" must be the last command in the character string. "DO" is used to disable the display mode. The following characters can be depicted in the display:

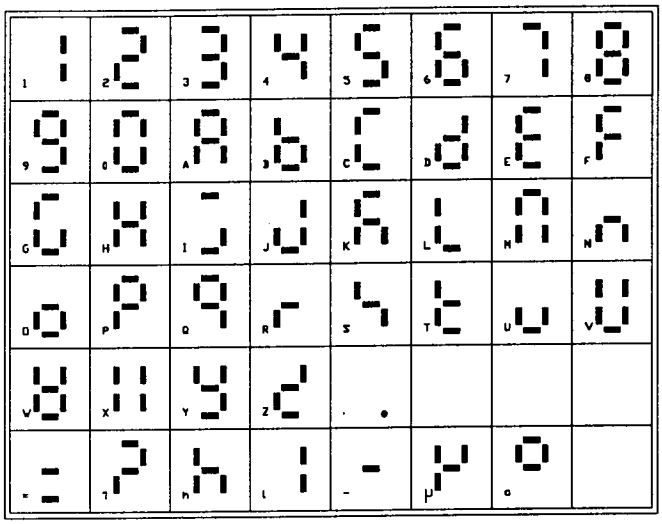

For more programming examples for the IEEE 488 interface please see German manual.

CALIBRATION

Allow a period of 2 hours to elapse after switching on, before commencing calibration, so that the DMM has reached thermal equilibrium.
The DMM has a digital calibration facility which permits individual range or complete recalibration. It is not necessary to open the unit for recalibration. Recalibration is possible under front panel keyboard control or via the IEEE 488 bus. The correction values from the first calibration carried out in the HAMEG factory are stored in the program EPROM and in a CMOS RAM with a battery as backup power supply. The DMM normally uses the correction values which are stored in the CMOS RAM. The battery service life is about 10 years.

To prevent unintentional destruction of the correction values, they are protected in memory by setting a recessed sliding switch S2 which is above the IEEE-Bus connector at the rear of the unit. The settings of this switch are marked "MEAS" and "CAL". To recalibrate the DMM, move the switch with the aid of a screwdriver or similar tool from "MEAS" to "CAL".

The "CAL" operating mode is indicated by periodic appearance of the legend "CAL" in the main display. In this status the correction values stored in the CMOS RAM are

unprotected and can be overwritten. If correction values have been lost accidently by improper calibration attempts and recalibration is not possible because no calibration standards are available, then the correction values which have been stored by HAMEG in the program EPROM at the time of initial calibration of the instrument, can be copied into the CMOS RAM. For this purpose, set the mains switch of the multimeter once to "OFF" and then to "ON" again, whereby the calibration switch on the rear side of the instrument must be left in setting "CAL". Hereby the calibration correction factors are automatically copied from the EPROM to the battery backed-up CMOS RAM and all correction values for the input offset are cleared. Thus it is necessary thereafter to make new compensation of the input offset for all functions and ranges.

For this purpose, place a short circuit at the input sockets "V/Ω" of the digital multimeter, select measuring function "V_{DC}" and "Auto" for autoranging and then press the "Zero" key. The multimeter now corrects all VDC measuring ranges in automatic succession and places the found correction values in the RAM which can subsequently be protected. To correct a single measuring range, select just this range, leaving autoranging ("Auto") switched off.

Calibrating the Direct Voltage Measuring ranges

First select the measuring range which is to be calibrated and then connect an exactly known positive or negative reference voltage to the input terminals. This reference voltage should not be less than 5% or more than 100% (preferably 50% to 100%) of the range span. The DMM now displays a measurement result which has been calculated using the old calibration factor. If this actual value differs unacceptably from the nominal value (known value of the reference voltage), then call the calibration program. The nominal value can now be set using the "up" and "down" keys. The "down" advances the digit opened for correction. When the digit to be corrected in the display has been reached, it starts counting cyclically 0-9 after a short delay. This counting can be stopped and started again with the "up" key. When all digits have been corrected to the nominal value, start the actual calibration measurement by pressing the "Enter" key . "CAL." thereupon appears in the display and the remaining time of the calibration measurement is counted down to Zero in the display, similar to the sequence of events for a Zero point measurement.

Thereafter the unit exits the calibration program and new functions and ranges can be selected. The calibration program is also aborted when any other key except "up", "down" or "Enter" is pressed, in which case the old calibration factor is retained and no change has been made. To recalibrate several measuring ranges individually, start the entire procedure as described above for each range. After completing all intendend recalibrations, make quite sure that the recessed slide switch on the rear panel of the unit is returned from "Cal" to "Meas", so that the calibration data are protected again.

Calibration procedure via the IEEE 488 bus is basically analogous to the described procedure via the front panel keyboard. The nominal value is set as integer number with the command "NVXXXXXX" (see calibration program in the section headed "IEEE 488 bus interface"). The calibration program and the calibration measurement are started automatically on transmission of the nominal value. When no further ranges and functions are to be calibrated, terminate the calibration procedure by returning the slide switch on the rear panel of the unit from setting "Cal" to setting "Meas".

Calibrating the resistance measuring ranges

The resistance measuring ranges are calibrated in 2-pole circuit. First connect the zero point by the procedure described in before. Also observe the instructions given in the section headed "operating instructions for resistance measurements Ω/kΩ", in particular regarding compensation of the measuring leads resistance. Calibration procedure for the resistance measuring ranges is otherwise analogous to calibration of the direct voltage measuring ranges.

Calibrating the Alternating Voltage Measuring Ranges

The alternating voltage measuring ranges should be calibrated with a sinusoidal alternating voltage with a frequency of 1 kHz. For the function V_{AC} too, the zero point must first be compensated in function setting V_{AC}. The calibration procedure is analogous to calibration of the V_{DC} ranges.

Calibration of the Current Measuring Ranges

For the current measuring ranges too, make the same calibration preparations as specified before. The zeropoint measurement must be made with open circuit input sockets. Do not leave any measuring cables connected to the input sockets for the zero point measurement (see also operating instructions for mA_{DC} and mA_{AC}). 1kHz sinusoidal reference currents are required for calibrating A_{AC} ranges. The calibration current (reference current) must not be greater than 1 A in the 2 A range.

Attention! Do not forget to return the calibration switch to position "Meas"!

Calibration of temperature measurement ranges

Before calibrating the HM8112-2 for temperature measurements an offset compensation must be carried out. For this the input sockets must be short-circuit, and offset compensation must be activated. Thereafter the message "doneE" is read in the display or via the IEEE-bus.

Zero compensation means the internal "adjustment" of the input amplifier and doesn't mean any adjustment of the external probe. To compensate for probe tolerances it must be placed in a medium of known temperature, and the temperature must be transferred to the DMM via the keyboard or the IEEE-interface.

Subject to change without notice

Service manual
Introduction

These service instructions for the HM 8112-2 are intended as a supplement to the user manual, to give the experienced electronics engineer the information required for maintenance, fault tracing and repair of the instrument.

WARNING

The service tasks described here may be carried out only by qualified technicians. When the cover of the instrument is removed, human contact with points carrying potentially lethal voltages is possible. Thus the following safety precautions must be observed.

a) Before opening the case, disconnect the mains plug and all connections at the measuring sockets.
b) Always use an isolating transformer when making measurements and adjustments in the opened DMM.
c) When the instrument is in the opened state, connect only non-dangerous voltages to the measuring inputs.

This instrument is guaranteed to be in perfect condition when leaving the factory. HAMEG accepts no liability for any damage caused by incorrect operation or improper handling of this instrument.

WARNING

The analog section of the Digital Multimeter HM 8112-2 is aligned with respect to alternating voltages. Replacement of components and especially replacement of the printed circuit board to repair the instrument may make realignment and recalibration necessary. The data stored in the battery backed-up RAM may be lost during repair work, due to a short circuit on the printed circuit board, disconnection of the RAM from the battery or even by electrostatic discharge. As a general rule, any repairs of the HM 8112-2 should be carried out only at a workplace which is suitably protected against static electricity. **Bear in mind that the lithium battery may explode if it is short-circuited.**

Functional principles of the HAMEG DMM HM 8112-2

The measured signal is taken via the attenuator and via the preamplifier to the converter. The converter transforms the analog signal into a proportional pulse group which is sent via the "MEASUREMENT RESULT" line (CB=U9, Pin 8) to the microprocessor circuit board. The pulses are transmitted in basic state HIGH or LOW, depending on the polarity of the measured signal. A sub-measurement is complete after every 25 ms. This is reported to the SERIAL TO PARALLEL CONVERTER (U12) via the line "END OF SUB-MEASUREMENT" (U9,Pin 11) by means of a pulse. The converter and preamplifier offset of the measured data is subtracted in the microprocessor section. The data are then multiplied by a calibration factor. The subtrahend and the calibration factor are determined at the time of zero measurement and calibration respectively (see user manual) and stored in battery backed-up RAM. The results are then filtered by software according to the set integration time and finally output to the seven segment display and to the IEEE 488 bus. The data from the keyboard evaluator (U 4) are sent via (U 12) and Q 5 to the relay control circuit (U 10), for function and range selection of the DMM.

ASSEMBLY/DISASSEMBLY

Microprocessor printed circuit board

Unsolder the transformer connecting wires from the mains PCB, the mains ground connection from the floor of the case and the two connecting wires of the trigger socket. Disconnect the plug connectors to the display and analog circuit board. Remove the screws: 2 x IEEE 488 bolts, 4 x transformer mounting screws , 1 x screw on printed circuit board, 1 x screw on the 5 V regulator. The heat dissipated by the 5V regulator (under the microprocessor circuit board) must be cooled by an adequately dimensioned heatsink even when the circuit board is operated shortly in the removed state (e.g. by a 40x100x20 mm ribbed heat sink). When remounting the microprocessor circuit board, the case of the 5V regulator must be attached to the case of the instrument in electrically isolated manner (using the insulating nipple and the mica disc). The washer, the insulating nipple and mica insulating disc below this nipple on the 5V regulator must be remounted in this order.

Analog circuit board

Release the three mounting screws of the circuit board and the plugged ribbon cable connection to the microprocessor circuit board (observe the correct DIP-PLUG ORIENTATION). The analog circuit board can now be folded out to the front for repair. To take out this circuit board completely, it is also necessary to disconnect the five leads which go to the display board (or to the scanner board).

Scanner circuit board (option)

Release the mounting screw of the printed circuit board and the plugged ribbon cable connection to the analog circuit board (observe the correct DIP-PLUG ORIENTATION). Unscrew the two bolts of the 50-pole subminiature D plug) out of the rear panel of the instrument. The scanner circuit board can now be pulled slightly towards the front panel and can then be folded out upwards. To take it out completely, also disconnect the leads which go to the analog and display circuit board.

Functional tests / Power supply voltages

Microprocessor circuit board:

+ 5V: Power supply for the µC-board and for display board.
±15V: Power supply for the analog board and for the scanner board. A 5V regulator on each of these circuit boards produces another internal supply voltage from the +15V supply (U8 + U4).

The "DIGITAL" ground (5V supply ground) on the microprocessor board and display board is electrically isolated from the case of the DMM and from the "ANALOG" ground (+/- 15V supply ground) of the analog board and scanner board. Thus voltage measurements must be referenced to the corresponding ground potential. The fourth line which is totally electrically isolated is the GUARD connection.

The 5V regulator (U 1) under the microprocessor board is screwed directly but electrically isolated (mica disc) to the case of the instrument for efficient cooling. R 1 and R 2 (each 10 Ohms on microprocessor board) are safety resistors for the +/- 15V supply. R 1 and R 2 must be replaced after current overload (repair).

Analog circuit board

The +/- 15V supplies transferred by the plug connector between the microprocessor board and the analog board, must be present at the reference element (U 4) on the analog circuit board: +15 V at pin 3, -15 V at pin 2, analog ground at pin 4, the reference voltage of about 7V at pin 1. +5V with respect to +/-15V "ANALOG" ground must be present at the cathode of CR 4 and at pin 10 of U 9. An auxiliary voltage of 1.2 V is also present at pin 6 of U 9.

Scanner circuit board

+15 V transferred by the plug connector between the analog board and the scanner board, are present at pin 1 of U 1 and the generated +5 V supply should be measured at pin 16 of U 3, in each case with respect to +/-15V "ANALOG" ground.

DIGITAL SIGNALS

Microprocessor circuit board

CLOCK: The microprocessor clock signal (about 800 kHz) is generated in U 9 on the analog circuit board and lies at U 9, pin 7. The opto-coupler U 13, pin 6 transfers the "CLOCK" signal to the microprocessor board.

ERG: The RESULT signal lies at U 9, pin 8 on the analog board. The opto-coupler U 14, Pin 6 transfers the "ERS" (RESULT) signal to the microprocessor board.

UME: The sub-measurement end signal lies at U 9, pin 11 on the analog board. The opto-coupler U 15, pin 5 transfers the "UME" signal to the microprocessor board. U 16, U 17 and U 18 service the IEEE 488 ROUTINES. U 4 evaluates the keyboard and handles the display elements.

Analog circuit board

The ranges and functions of the HM 8112-2 are set with bistable relays which are driven by HIGH (greater than or equal to 13 V) and LOW (smaller than or equal to 0.6 V) signals at the outputs of U 10 (Pin 4, 5, 6, 7, 8, 9, 10, 12). U 10 obtains its data from the microprocessor via the interface U 12 (Pin 18) and the opto-coupler Q 5 on the analog board. When repair is necessary (Q5 defective), it may be necessary to adjust the base resistor R38 (100k), to improve the transfer performance of Q5.

Scanner circuit board

U 1 on the scanner board is, analogously to U 10 on the analog board, responsible for the relay drive and thus for channel selection in the scanner: HIGH (greater than or equal to 13 V) at pin 1 to pin 10 of U 1 connects through the respective channels 0 (K0) to 9 (K9). The relays R1 and R2 are driven from U 1 pin 11 and pin 12. In instruments with the scanner option fitted, R1 and R2 connect and disconnect the front panel sockets.

ANALOG SIGNALS

Functional test for attenuator + preamplifier

Direct voltage measurement:

Switch the DMM to the Vdc function. Connect a reference voltage (e.g. $U_{ref} = 1\ V_{DC}$) to the V/Ω input of the instrument. Using the auxiliary DMM (6½ digits), measure the voltage Uvv at the output of the preamplifier (U3, pin 6) with respect to +/-15V analog ground. Switch through the respective V_{DC} measuring ranges and in each case measure the voltage Uvv. Table 1 lists the nominal values for Uvv in the respective measuring ranges, for input reference voltages of 0.1 V_{DC} and 1 V_{DC}.

V_{DC}-range	U_{ref}/V	Uvv/V	
0.2	0.1	1.000	
2	1	1.000	
20	1	0.100	
200	1	0.010	
1000	1	0.001	Table 1

Resistance measurement

Switch the HM 8112-2 to the kΩ measuring function. Connect a reference resistor (e.g. $R_{ref} = 1\ k\Omega$) to the V/Ω input of the instrument. Using the auxiliary DMM (6½ digits), measure the voltage drop Ua across Rref (see sketch). The current source (U 1) produces the voltage drops Ua across the reference resistor as listed in Table 2 in the respective measuring ranges:

kΩ-Range	R_{ref}/kΩ	U_a/Volt	
0.2	1	- 0.7	
2	1	- 0.7	
20	1	- 0.07	
200	1	- 0.007	
2000	1	- 0.0007	
10000	1	- 0.0007	Table 2

Current measurement

Switch the DMM HM 8112-2 to the mA_{DC} measuring function. Feed a reference current (e.g. $I_{ref} = 1mA$) through the "A" input of the instrument. Using the auxiliary digital multimeter (6½ digits), measure the voltage Uvv at the output of the preamplifier (U3, pin 6) with respect to ±15V analog ground. The readings listed in Table 3 should be obtained for the two direct current measuring ranges ($I_{ref} = 1mA$).

mA-Range	I_{ref}/mA	Uvv/Volt	
2	+ 1	- 1.000	
2000	+ 1	+ 0.001	Table 3

Integrator output signal

The integrator output signal can be measured at U 9, pin 12 with an oscilloscope (with respect to +/-15V analog ground). With negative direct voltage applied to the V/Ohm input of the HM 8112-2. The oscillogram shown next page should be obtained.

Subject to change without notice

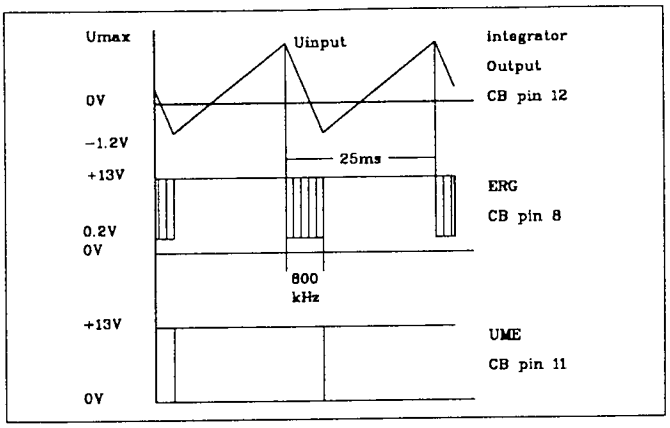

CIRCUIT BOARD REPLACEMENT

In the instrument which is to be repaired, disconnect the circuit board which is suspected to be defective and connect a replacement circuit board via the "extension". When it has been verified in this manner, which circuit board(s) is/are defective, replace it/them in the HM 8112-2. The DMM must be recalibrated and a new Vac alignment made after every replacement of a circuit board.

WARNING

Data may be lost in the course of repairs on the microprocessor circuit board. Thereafter the HM 8112-2 may not start at all, or may start incorrectly, after switch-on. In this case switch to "CAL" (CAL-MEAS switch on the rear panel) and then switch the instrument off and on again. Thereby bear in mind the following:

! Offset correction values are erased permanently!

Calibration factors: The values for all ranges and functions which have been determined in the HAMEG factory and stored in the EPROM, as well as the initialization values for the IEEE address (07.8), for the integration time (1 sec, 5½ digits) and for channel preselection (no channel selected) are loaded into the battery backed-up RAM.

The analog circuit board must always be replaced together with the EPROM which contains the specific calibration data for this board. When only the microprocessor board has been replaced and the "old" analog board remains in the instrument, the corresponding "old" EPROM with the calibration data for this "old" analog board must be inserted again into the now "new" microprocessor board. The procedure for loading the calibration data from the EPROM into the battery backed-up RAM is described in the user manual part.

FREQUENCY ALIGNMENT

Aids: AC calibrator (voltage and current); DMM (6½ digits).
The offset of the rms value rectifier (TRUE RMS CONVERTER, U 5) must be compensated before carrying out the frequency alignment of a HM 8112-2. For this purpose, switch the instrument to the 2V AC measuring range. Plug a shorting jumper into the V/Ω input sockets. Using the auxiliary digital multimeter (6½ digits), measure the voltage Ua rms with respect to +/-15V analog ground at the output of the true rms converter (pin 10, U 5). Adjust the trimmer R 23 to make Uarms zero (tolerance ±50 µV). The frequency alignment of the HM 8112-2 can then be carried out.

IMPORTANT For checking the frequency response, it is essential to close and efficiently ground the cover of the case. A special cover with holes for access to the trimmers is ideal.

1. 0.2 V_{ac}: No alignment required

2. 2 V_{ac}: No alignment required

3. 20 V_{ac}: 1. INPUT: 10V/90Hz; note the display reading
   2. INPUT: 10V/10kHz; adjust the trimmer cap. C 5 (20V_{ac}) to make the display reading the same as for 10V/90Hz.

NOTE: The 10V/90Hz display reading changes. Thus repeat the steps 1. and 2. alternately until both are correct.

4. 200 V_{ac}: 1. INPUT: 100V/90Hz; note display reading
   2. INPUT: 100V/10kHz; adjust the trimmer cap. C 3 (200V_{ac}) to make the display reading the same as for 100V/90Hz.
   The 100V/90Hz reading should not change.

5. 1000 V_{ac}: 1. INPUT: 100V/90Hz; note display reading
   2. INPUT: 100V/1kHz; adjust the trimmer cap. C7 (1000Vac) to make the display reading as closely as possible equal to the reading for 90 Hz (deviations up to 2000 digits are tolerated).

NOTE: The alignment of the 200 V_{ac} range may change, thus repeat alternately until both are correct.

FAULT TRACING

1. INITIALIZATION in setting "MEAS"

Set the MEAS-CAL switch to "MEAS"; switch the HM 8112-2 off, then SWITCH IT ON again. The DMM thereupon runs through a sequence of internal check routines: CONTROL 1,2,3. Thereafter, the DMM is set to the 1000 Vdc range and the display reads 0000.00.

2. INITIALIZATION in setting "CAL"

WARNING: All calibration data are erased.

Switch the HM 8112-2 off, set the MEAS-CAL switch to "CAL" and then switch the instrument on again. The instrument thereupon runs through a sequence of internal check routines: CONTROL 1,2,3. The display flashes alternatingly: "CAL" and (1000 Vdc) 0019.XX or 0025.XX. These digits (=CONVERTER OFFSET) appear in all functions and measuring ranges.

FAULT-SYMPTOMS	POSSIBLE CAUSES
1. No Initialization, not even in "CAL" setting	1. RAM (U 7) 2. Socket J5 3. U 9
2. No clock signal	1. Opto-coupler U 13 2. Plug connector 3. U 9 4. Crystal Y1
3. No ERG signal (Result)	1. Opto-coupler U 14 2. Same as for Fault 2.
4. No UME signal (end of submeasurement)	1. Opto-coupler U 15 2. Same as for Fault 2.
5. Incorrect INITIALIZATION in setting "CAL"	1. U 12 2. U 10 3. SH 10
6. RESET on HV INPUT	The microprocessor board is not screwed down firmly (C18 with respect to case GROUND)
7. IEEE 488 function	1. Plug connector 2. Control IC U 16 3. Driver IC U 17, 18
8. Fault in RANGE SELECTION	1. U 12 2. U 10 3. U 9 4. Relays
9. "NULL" impossible	U 9
10. No current measurement	1. 3.15A fuse (quick blow) 2. 3.15A fuse (slow blow)
11. V_{ac} offset can not be corrected	U 5
12. SCANNER FUNCTION	1. U 1 2. U 3 3. Plug connector 4. RC-combination near U 3 5. U 9 6. U 10 7. U 12 8. Q5
13. Display reading runs up until "ERR 1" appears	U 9
"ERR 1" in "kΩ"	1. Q1 2. Q2 3. U1 4. U4 7V reference
"ERR 1"	Uvv lies above the range limit (greater than 2V); there are many possible causes for this. Uvv o.k.; then check U 6, U 7, C 18, Q 3
"ERR 1"	o.k. in "kΩ" with open V/Ω input;
"ERR 4"	o.k. in "V_{dc}", "V_{ac}" 0.1V, 1V with open V/Ω input
"ERR 8"	1. Data loss 2. Lithium battery low; nominal voltage min. 3.2 V 3. See explanations below.

Unusually severe electrical disturbance in the operating environment of the HM 8112-2 (electric fields, induction currents, etc.) may affect the data held in the battery backed-up RAM (U 7), so that some or even all the data (calibration factors, offset correction values, IEEE address, integration time and channel preselection) may be changed or lost. The error display "ERR 8" then indicates this state of the instrument. The HM 8112-2 must now be recalibrated and/or the lost data must be reloaded.

Subject to change without notice

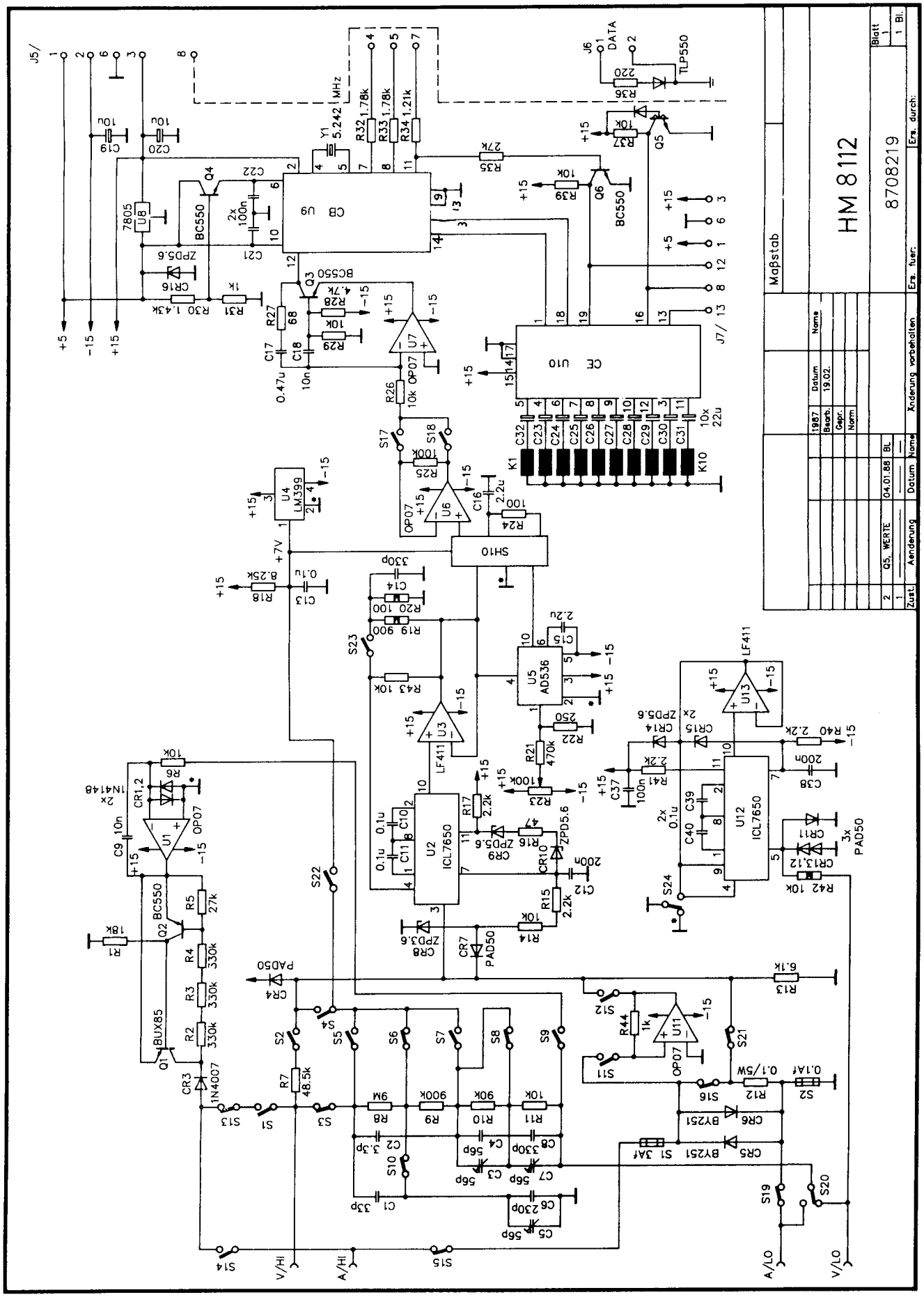
HM 8112
8708219
Maßstab
Änderung vorbehalten
Ers. fuer:
Ers. durch:
Blatt 1
1 Bl.
Q5, WERTE
04.01.88
Aenderung
Datum
Name
Zust.
CB U9
CE U10
SH10
U2 ICL7650
U5 AD536
U12 ICL7650
U13 LF411
U4 LM399
U1 OP07
U11 OP07
U7 OP07
U6 OP07
U3 LF411
Q1 BUX85
Q2 BC550
Q3 BC550
Q4 BC550
Q5
Q6 BC550
Y1 5.242 MHz
J5/
J6 DATA
J7/
K1
K10
V/HI
A/HI
A/LO
V/LO

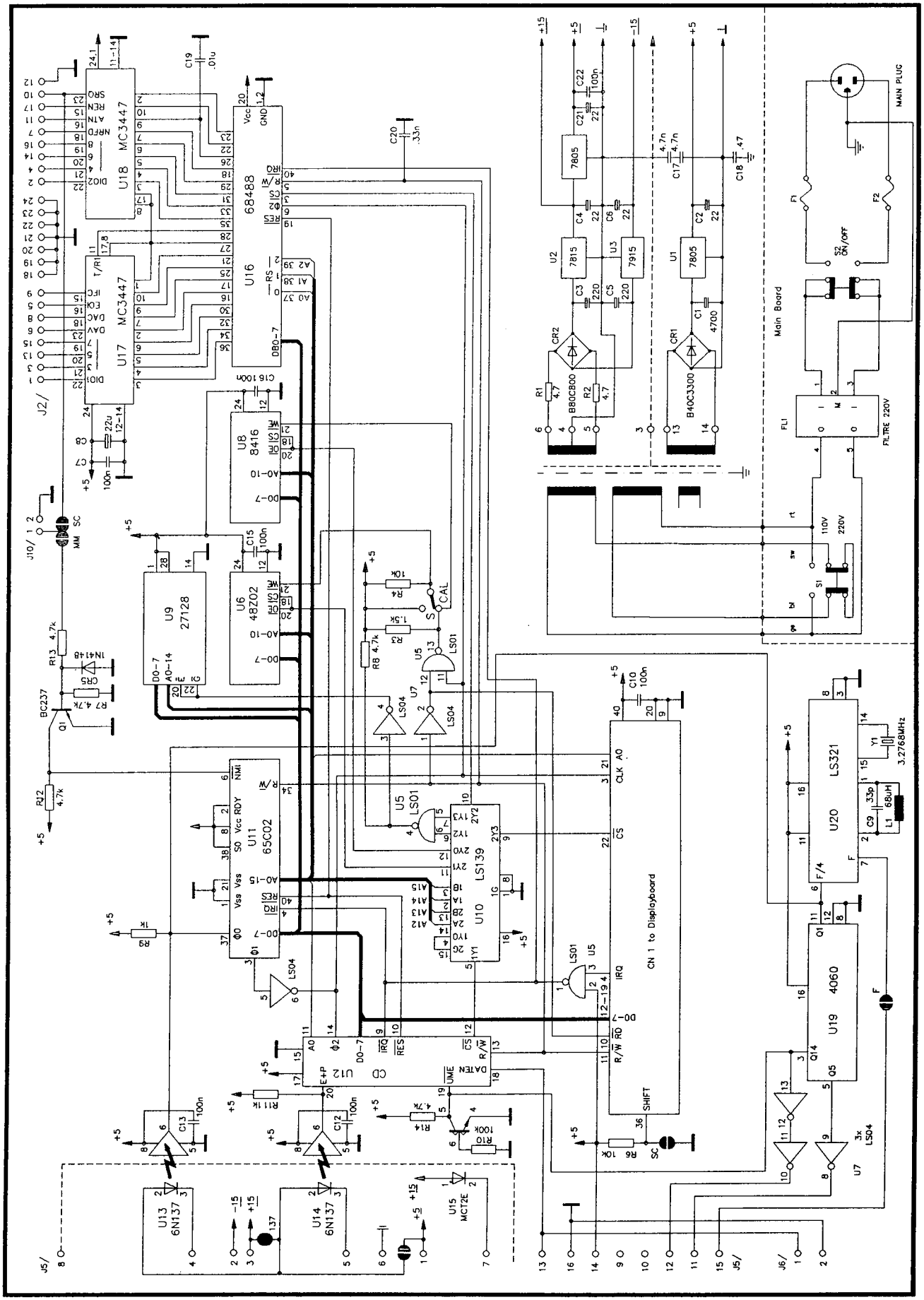

Änderungen vorbehalten / Subject to change without notice

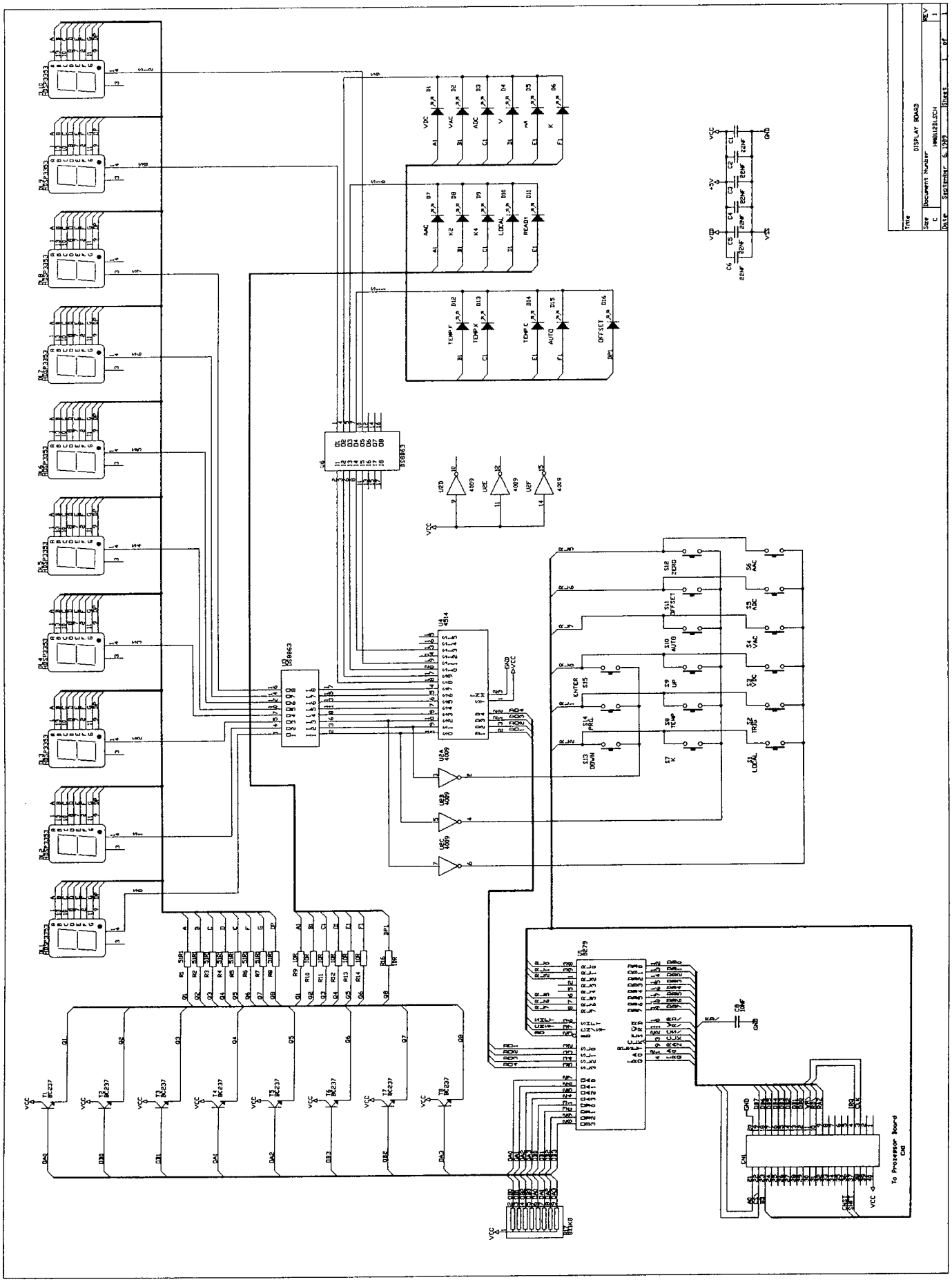

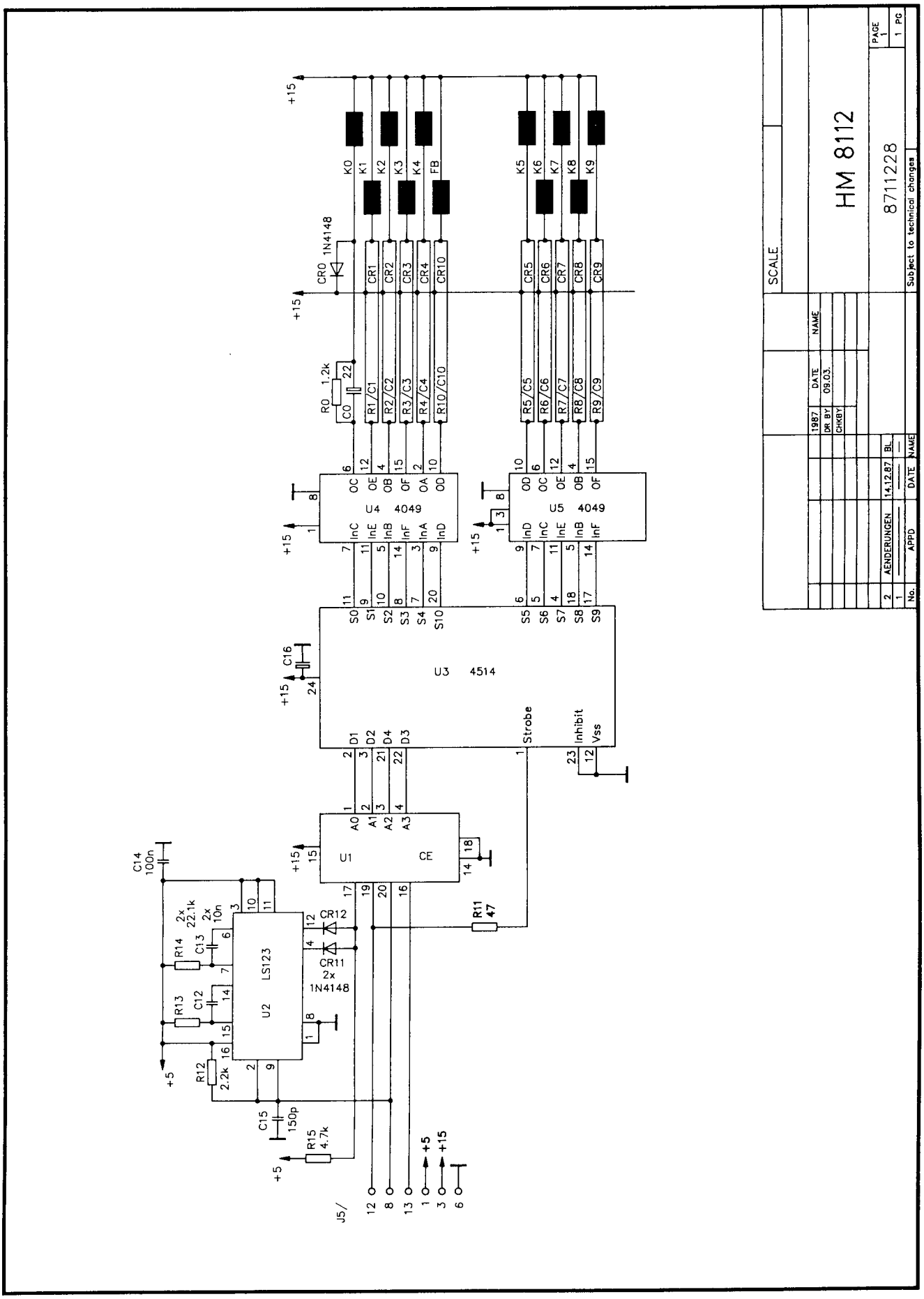

Änderungen vorbehalten / Subject to change without notice

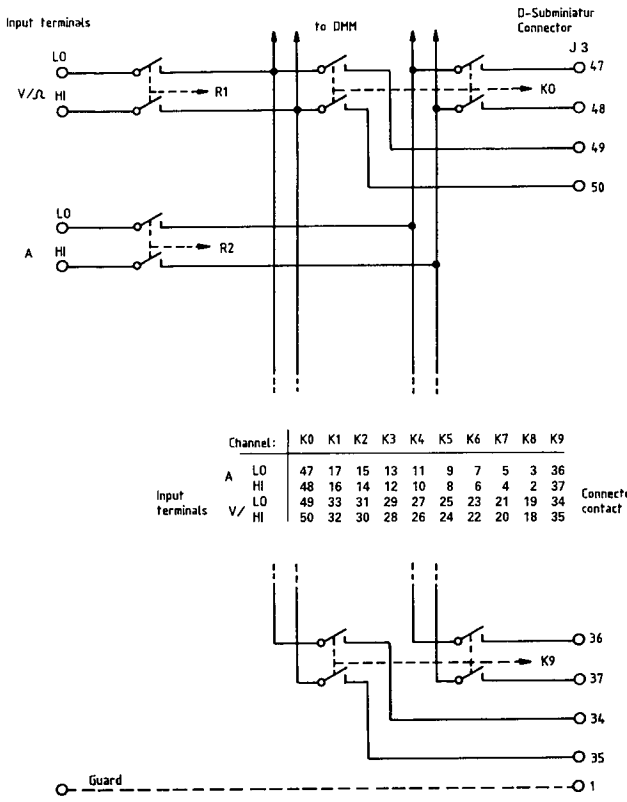

	Channel:	K0	K1	K2	K3	K4	K5	K6	K7	K8	K9
Input terminals	A LO	47	17	15	13	11	9	7	5	3	36
	A HI	48	16	14	12	10	8	6	4	2	37
	V/ LO	49	33	31	29	27	25	23	21	19	34
	V/ HI	50	32	30	28	26	24	22	20	18	35

Connector contact plan

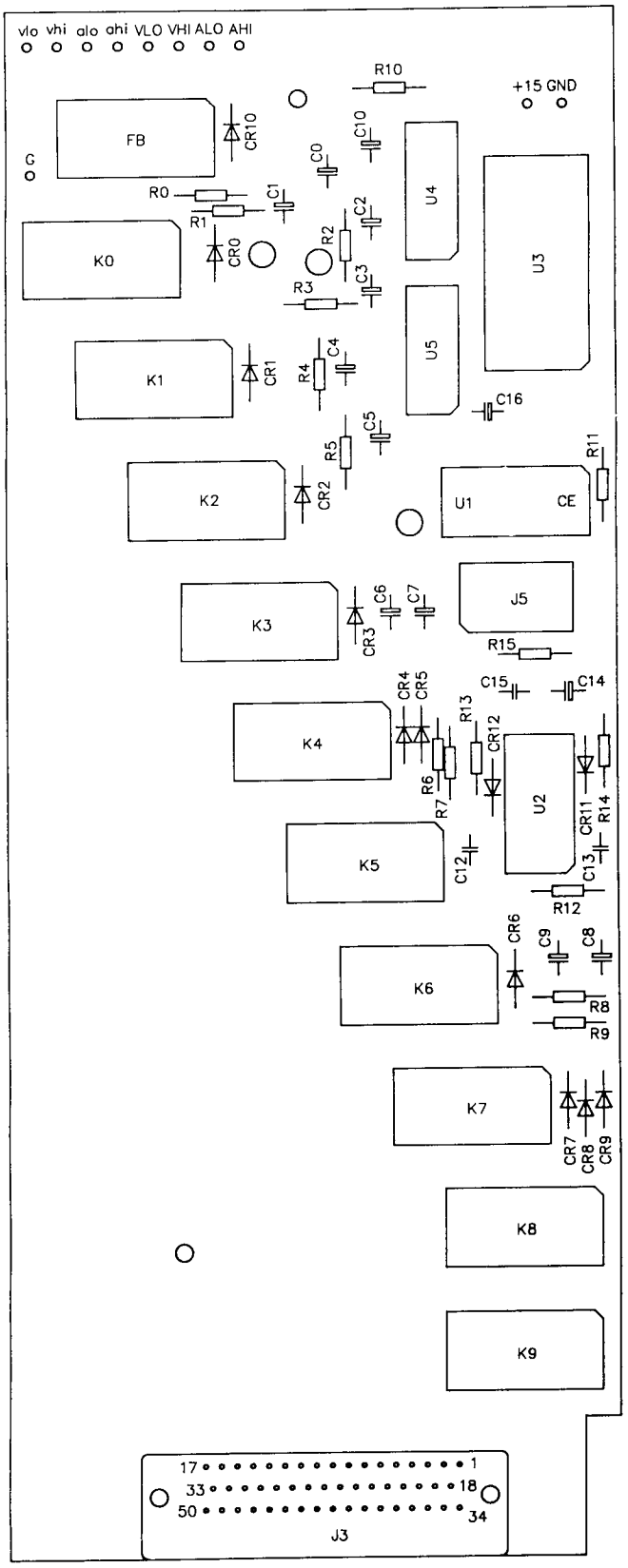

10-Kanal-Adapter
10 Channel Adapter

HM8112-2

Bestückungsplan Adapterplatine
Component Locations Adapter Board

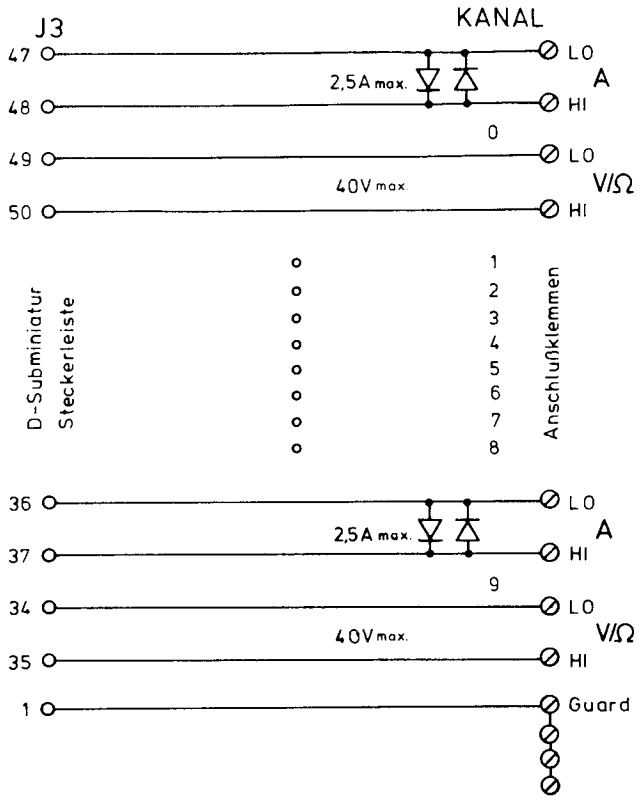

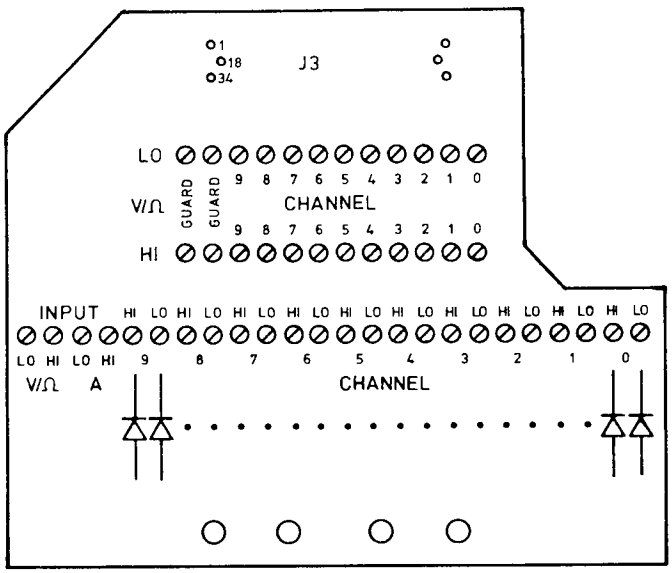

Bestückungsplan Netzanschluß
Component Locations Mains Board

HM8112-2

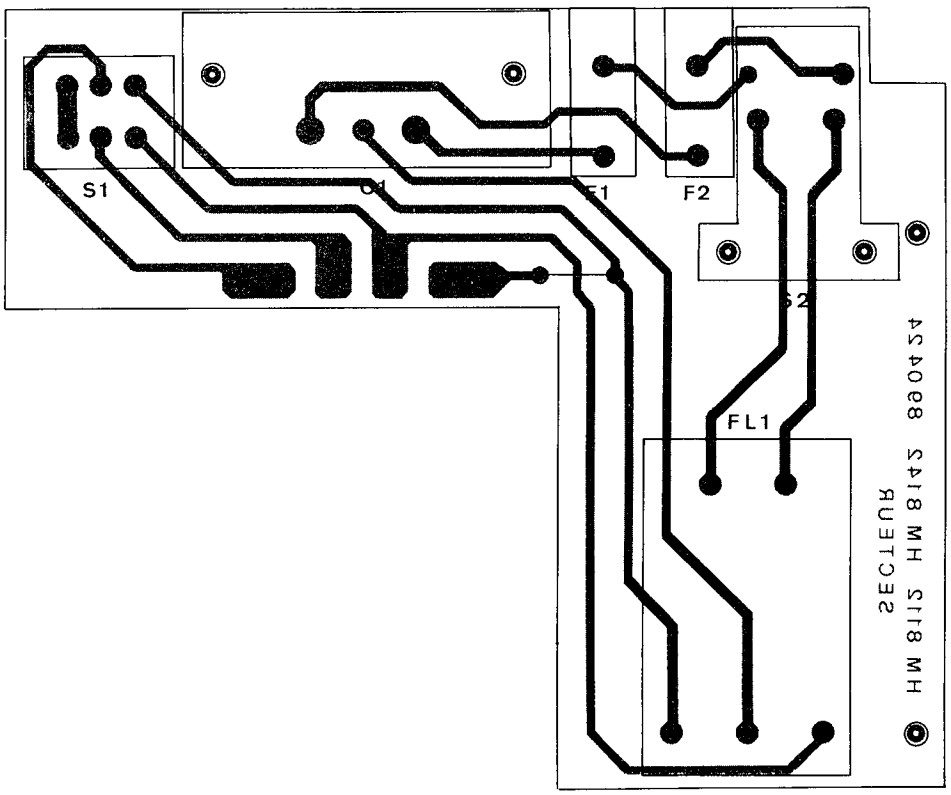

Änderungen vorbehalten / Subject to change without notice

Bestückungsplan Mikroprozessor
Component Locations Microprocessor

HM8112-2

Bestückungsplan Digitalanzeige
Component Locations Digital Display

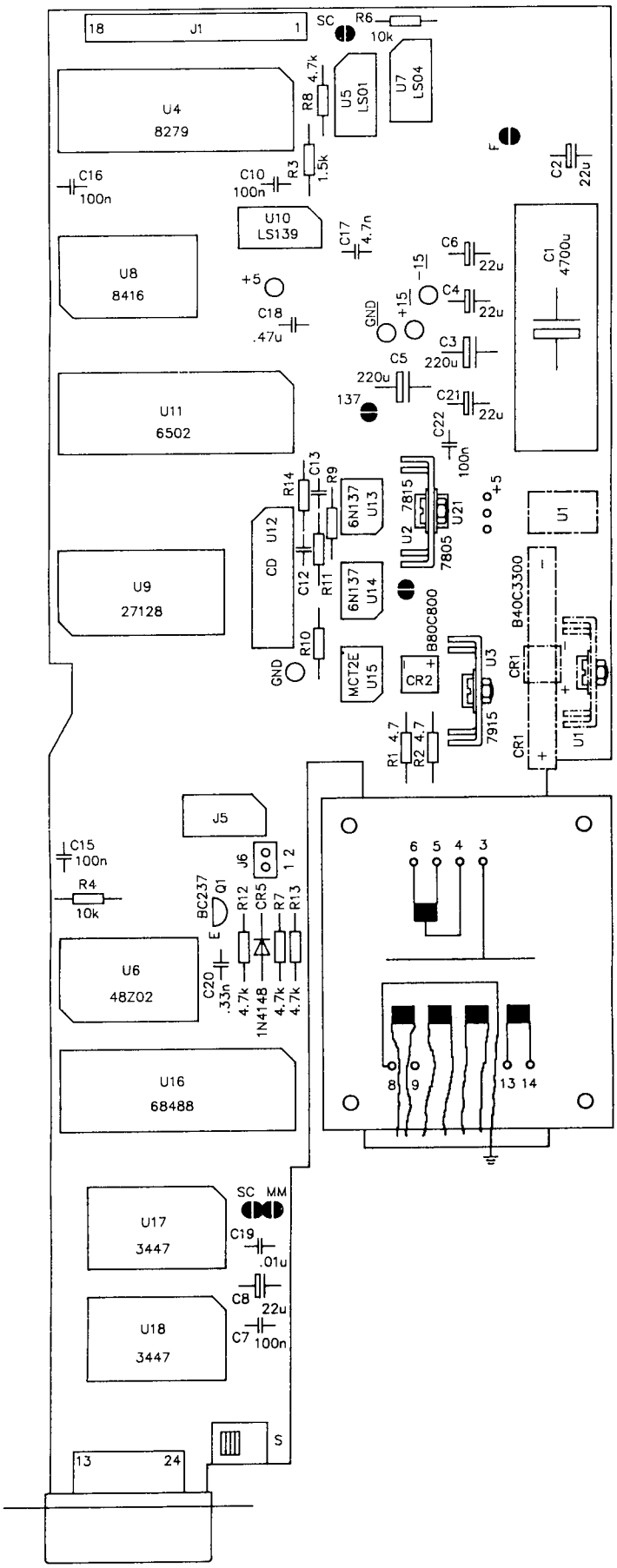

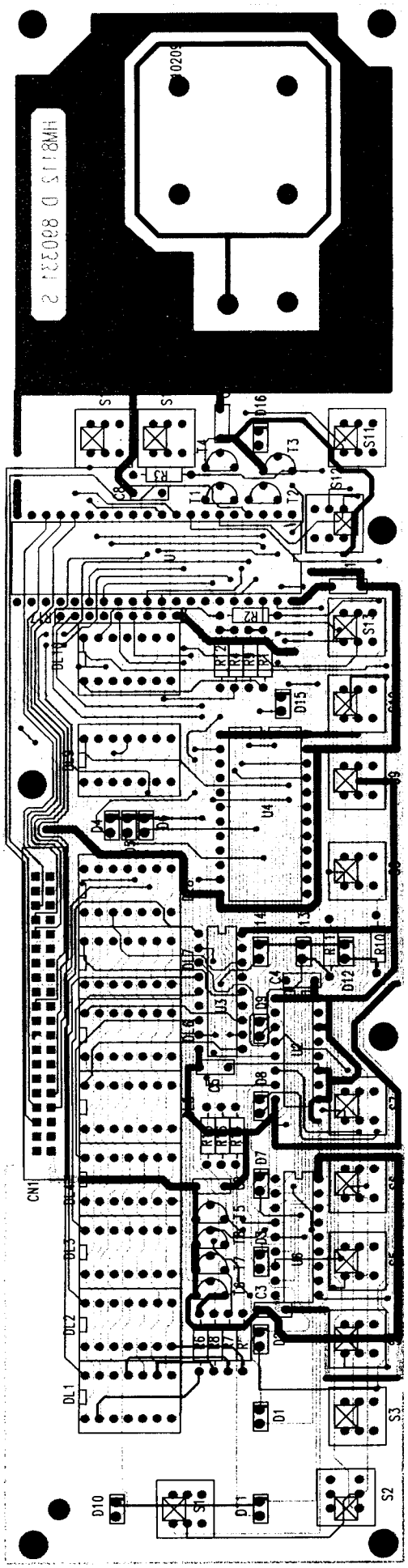

Bestückungsplan Vorverstärker
Component Locations Preamplifier

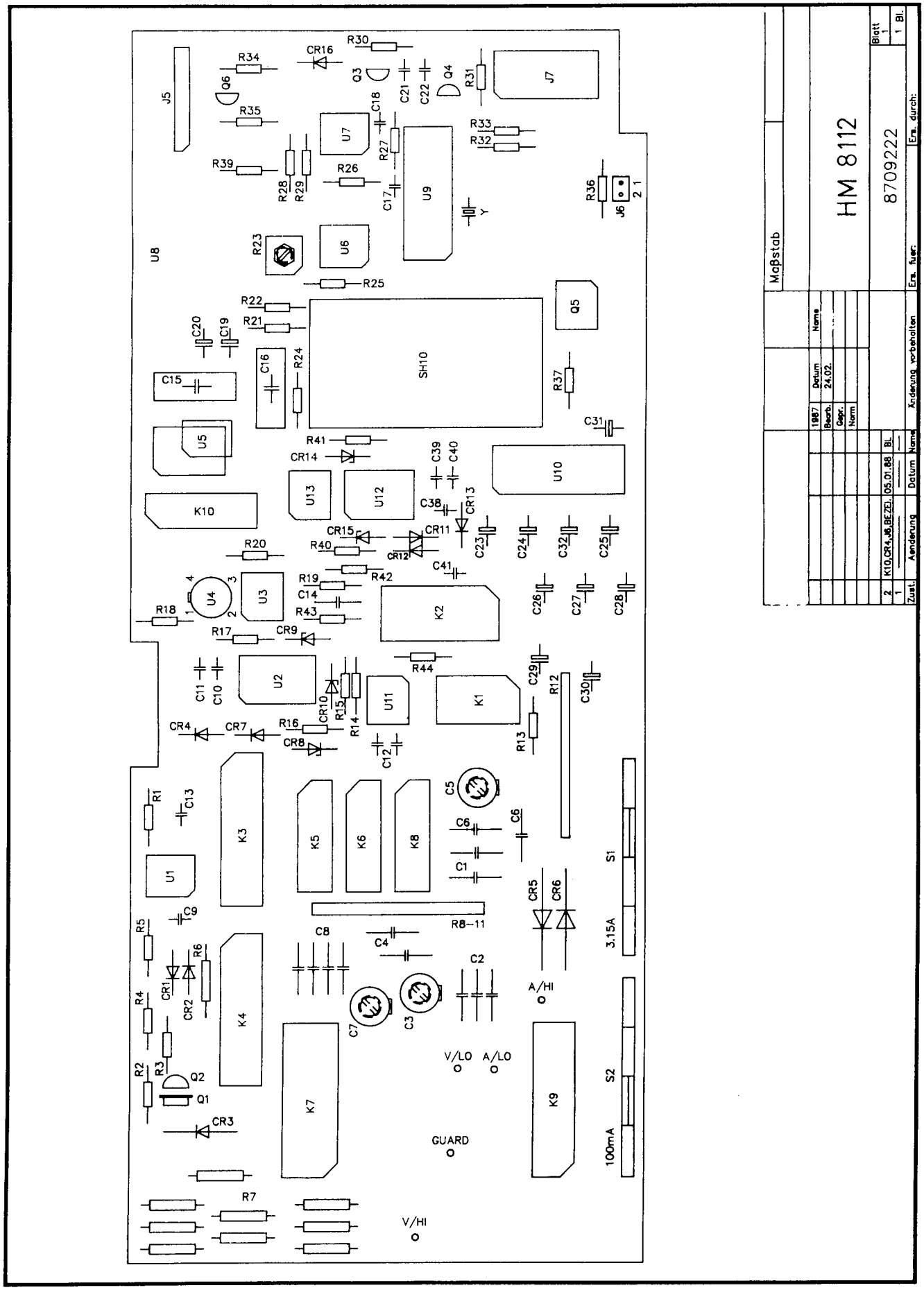

Änderungen vorbehalten / Subject to change without notice

HAMEG®
Instruments

Oscilloscopes

Multimeters

Counters

Frequency Synthesizers

Generators

R- and LC-Meters

Spectrum Analyzers

Power Supplies

Curve Tracers

Time Standards

45-8112-0260

HAMEG GmbH
Industriestraße 6
D-63533 Mainhausen
Telefon: +49 (0) 6182 / 800-0
Telefax: +49 (0) 6182 / 800-100
E-mail: sales@hameg.de
service@hameg.de

Internet:
www.hameg.de

Printed in Germany