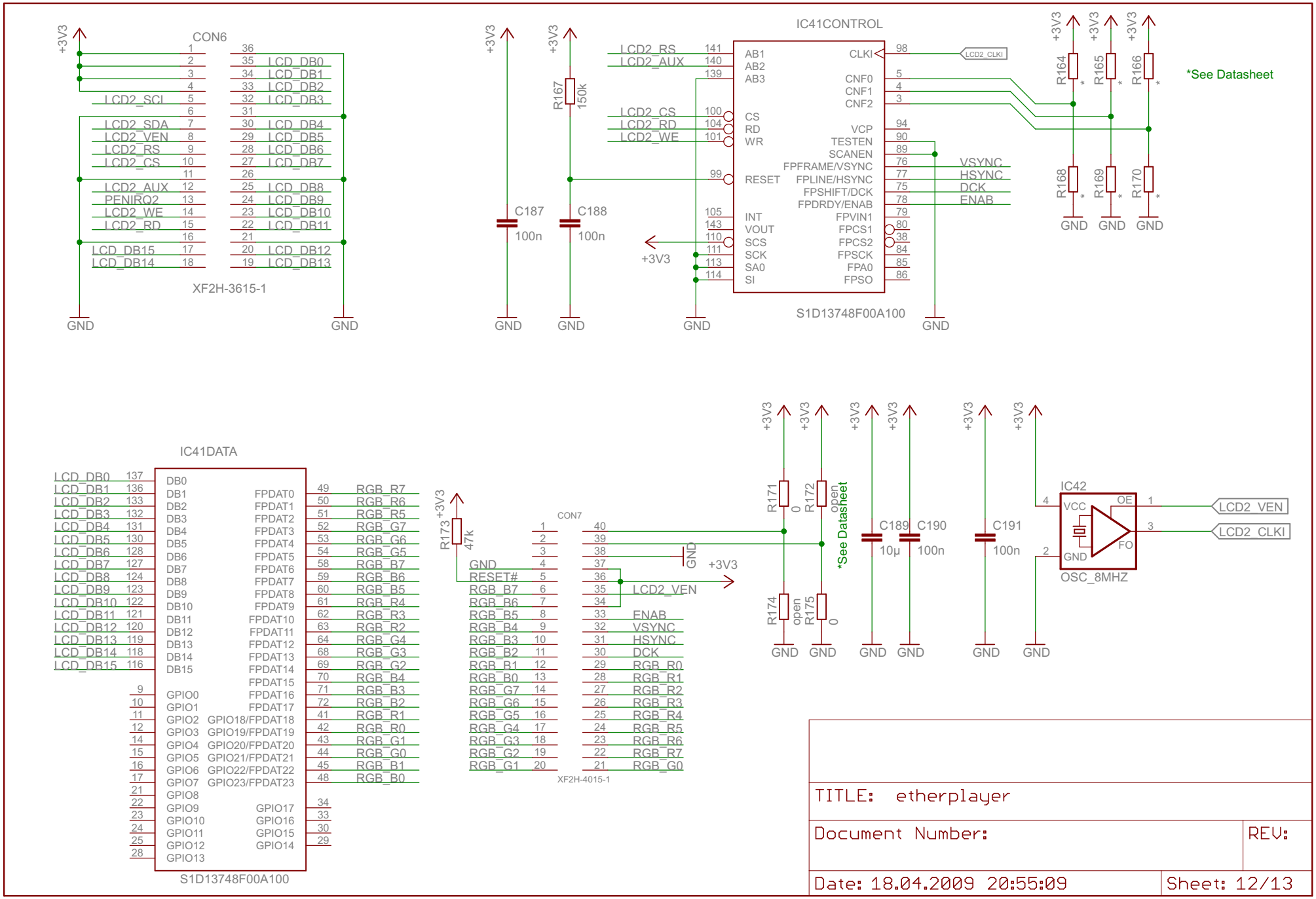
CON6
XF2H-3615-1
IC41CONTROL
S1D13748F00A100
*See Datasheet
IC41DATA
S1D13748F00A100
CON7
XF2H-4015-1
IC42
OSC_8MHZ
TITLE: etherplayer
Document Number:
REV:
Date: 18.04.2009 20:55:09
Sheet: 12/13