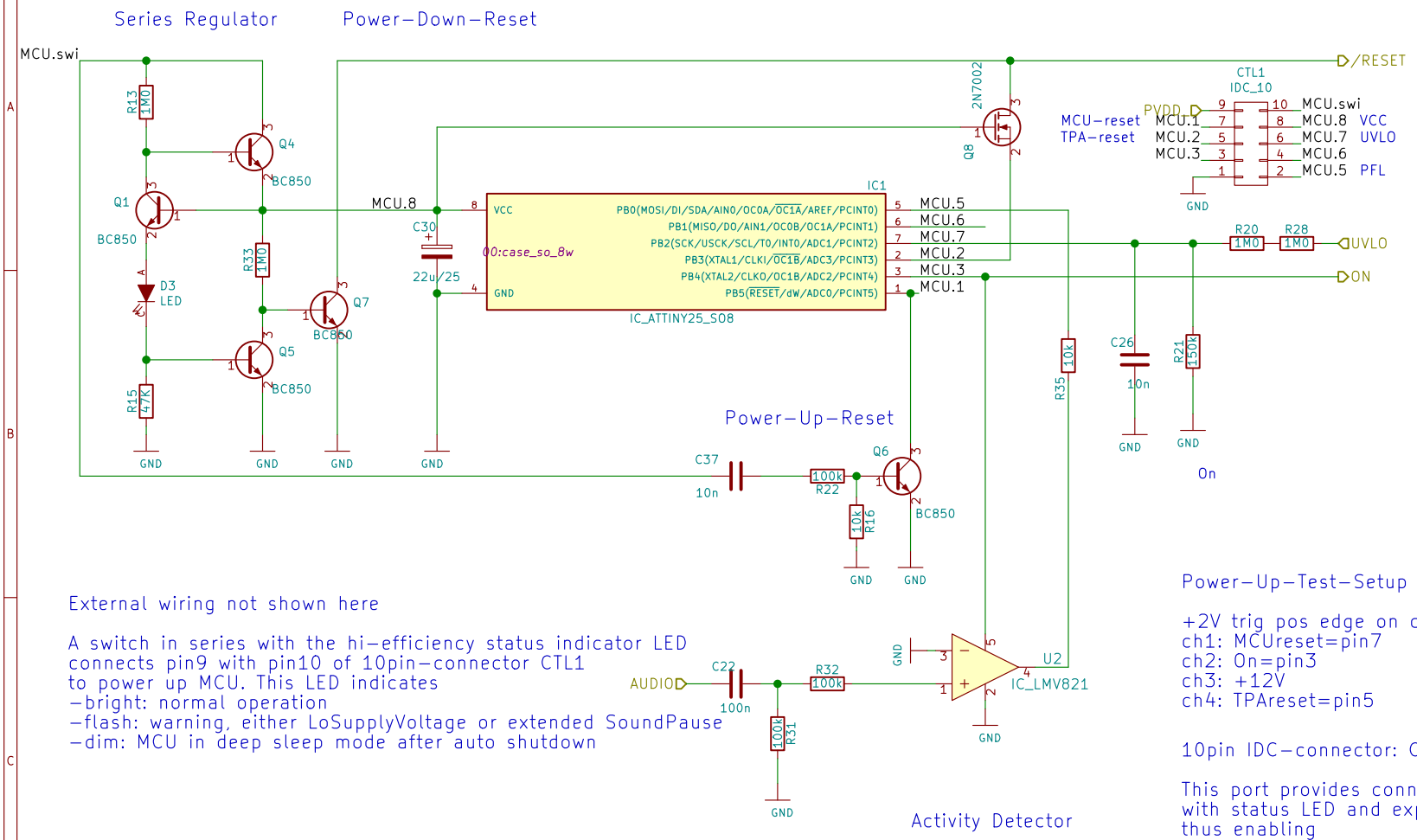

External wiring not shown here

A switch in series with the hi-efficiency status indicator LED connects pin9 with pin10 of 10pin-connector CTL1 to power up MCU. This LED indicates
- bright: normal operation
- flash: warning, either LoSupplyVoltage or extended SoundPause
- dim: MCU in deep sleep mode after auto shutdown

Power-Up-Test-Setup

+2V trig pos edge on ch1
ch1: MCUreset=pin7
ch2: On=pin3
ch3: +12V
ch4: TPAreset=pin5

10pin IDC-connector: Control port extension

This port provides connection to power-switch with status LED and exports all pins of Attiny25 thus enabling
- in-circuit flash programming Attiny25 via SPI
- monitoring port for diagnosis of power-up, power-down, auto-shutdown etc

Features
- designed for operation with 8S1 Li-Ion-cells
- switching the aux supply instead of power rails reduces stress on p-channel switch considerably
- in idle mode while switch remains turned on after auto-shutdown the MCU enters deep sleep mode with total power consumption dropping to <100uA.
- auto-shutdown on low supply voltage protects accu from deep discharge
- auto-shutdown after 15min music pause extends accu up-time ("Activity Detector")
- auto-shutdown on overtemperature protects TPA325x
- to resume from auto-shutdwon 1x cycle the power switch
- power-up: 1.5s delayed release of TPA325x-reset suppresses any power-on plopp-noise, including pre-amp turn-on-noise
- power-down: early reset on TPA325x suppresses any power- down plopp-noise, including pre-amp turn-off-noise

(C) Voltwide

Sheet: /MCU/
File: MCU.sch

Title: MCU controller for TPA3251 8S1 Li-Ion powered

Size: A4	Date: 2021-03-02	Rev: 2021-03-03
KiCad E.D.A. kicad 5.0.2+dfsg1-1		Id: 3/3