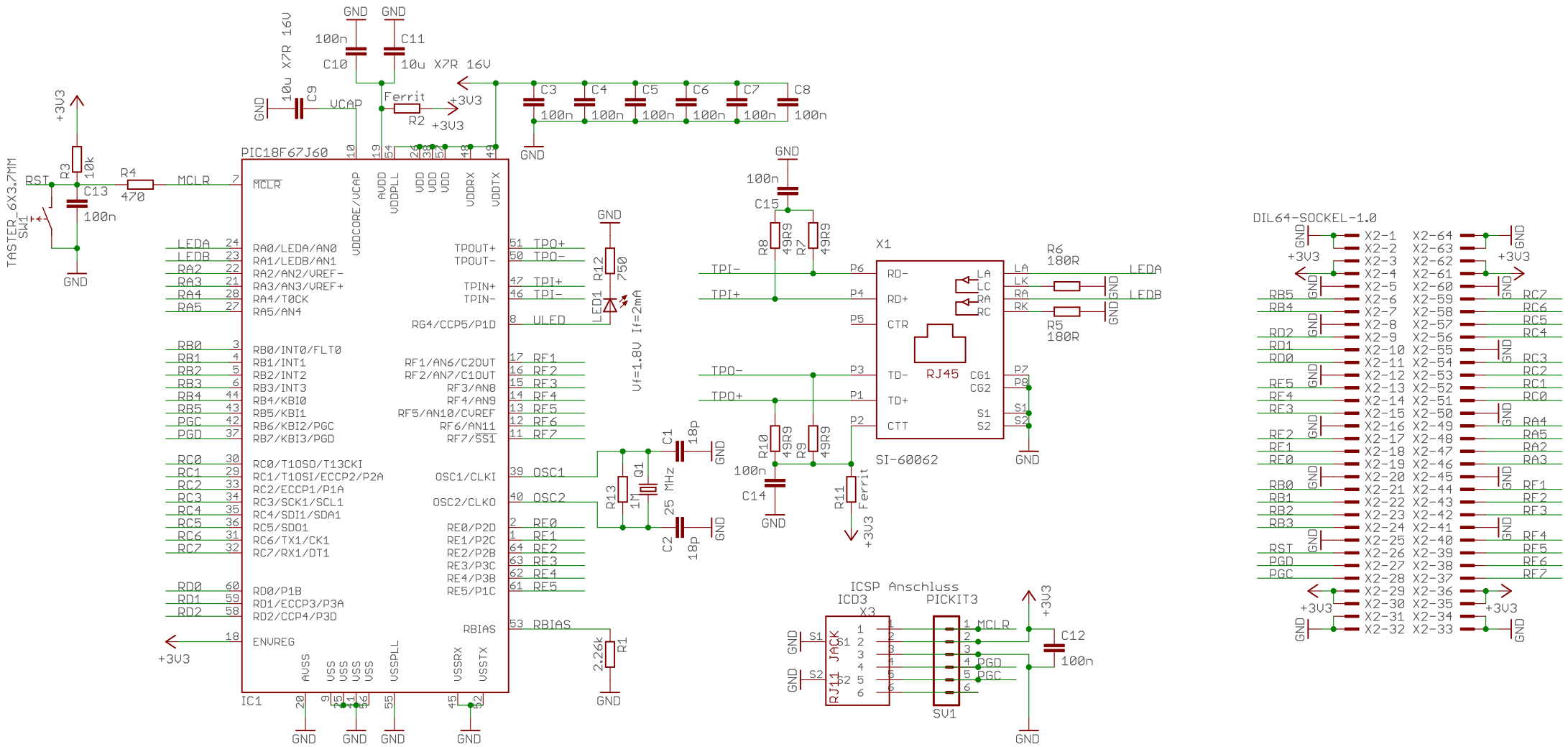
PIC18F67J60
IC1
TASTER_6X3.7MM
SW1
RST
R3 10k
R4 470
C13 100n
MCLR
+3V3
GND
C10 100n
C11 10u X7R 16V
C9 10u X7R 16V
VCAP
Ferrit
R2
C3 100n
C4 100n
C5 100n
C6 100n
C7 100n
C8 100n
C15 100n
R8 49R9
R7 49R9
R12 750
LED1
Vf=1.8V If=2mA
R13 1M
Q1 25 MHz
C1 18p
C2 18p
R1 2.26k
X1
RJ45
SI-60062
R6 180R
R5 180R
LEDA
LEDB
TPI-
TPI+
TPO-
TPO+
R10 49R9
R9 49R9
C14 100n
R11 Ferrit
ICSP Anschluss
ICD3
PICKIT3
X3
RJ11 JACK
SV1
C12 100n
MCLR
PGD
PGC
DIL64-SOCKEL-1.0
X2-1 X2-64
X2-2 X2-63
X2-3 X2-62
X2-4 X2-61
X2-5 X2-60
X2-6 X2-59
X2-7 X2-58
X2-8 X2-57
X2-9 X2-56
X2-10 X2-55
X2-11 X2-54
X2-12 X2-53
X2-13 X2-52
X2-14 X2-51
X2-15 X2-50
X2-16 X2-49
X2-17 X2-48
X2-18 X2-47
X2-19 X2-46
X2-20 X2-45
X2-21 X2-44
X2-22 X2-43
X2-23 X2-42
X2-24 X2-41
X2-25 X2-40
X2-26 X2-39
X2-27 X2-38
X2-28 X2-37
X2-29 X2-36
X2-30 X2-35
X2-31 X2-34
X2-32 X2-33