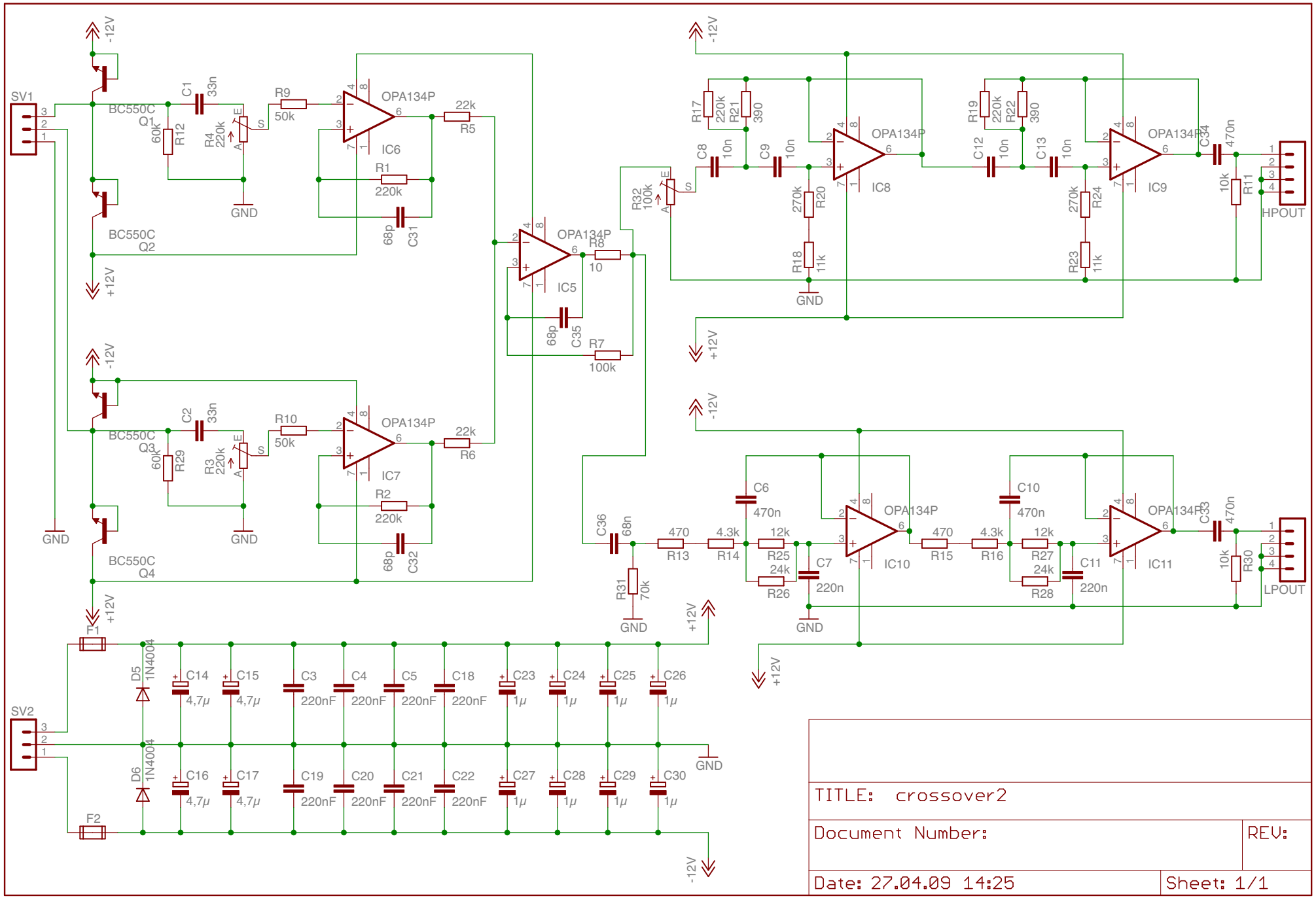


TITLE: crossover2

Document Number:

REV:

Date: 27.04.09 14:25

Sheet: 1/1