DMF697NY-EW

■MECHANICAL DATA

Item	Standard Value	Unit
Module Dimensions	78(W)×74.2(H)×10.3max.(D)	mm
Viewing Area	62(W)×44(H)	mm
Dot Pixels	128(W)×64(H)	dots
Dot Size	0.40(W)×0.56(H)	mm
Dot Pitch	0.44(W)×0.60(H)	mm

■ABSOLUTE MAXIMUM RATINGS

Item	Symbol	Condition	min.	typ.	max.	Unit
Supply Voltage (Logic)	$V_{CC}-V_{SS}$	—	−0.3	—	7	V
Supply Voltage (LCD Drive)	$V_{CC}-V_{EE}$	—	$V_{CC}+0.3$	—	28	V
Input Voltage	V_I	—	−0.3	—	$V_{CC}+0.3$	V
Operating Temperature	Topr	—	0	—	+50	°C
Storage Temperature	Tstg	—	−20	—	+60	°C

■ELECTRICAL CHARACTERISTICS・OPTICAL DATA Ta=25°C

Item	Symbol	Condition		Standard Value min.	typ.	max.	Unit
Supply Voltage (Logic)	$V_{CC}-V_{SS}$	—		4.5	—	5.5	V
Supply Voltage (LCD Drive)	$V_{CC}-V_{EE}$	—		—	—	26	V
Supply Current	I_{CC}	—		—	—	10	mA
	I_{EE}	—		—	—	5	mA
Input Voltage "H"Level	V_{IH}	High Level		$V_{CC}-0.8$	—	V_{CC}	V
Input Voltage "L"Level	V_{IL}	Low Level		0	—	0.8	V
Supply Voltage for LCD Drive 1/64 duty	$V_{CC}-V_{EE}$	Ta=0°C		—	—	16.4	V
		Ta=25°C		—	14.1	—	V
		Ta=50°C		11.8	—	—	V
Contrast Ratio	CR	$\theta=10°$ $\phi=90°$		4	—	—	—
Viewing Area	—	CR≧3	θ	−15	—	20	deg
			ϕ	45	—	135	deg
Response Time (rise)	τr	Note 1	Ta=25°C	—	—	230	ms
Response Time (decay)	τd	Note 2	Ta=25°C	—	—	230	ms

Note 1:Required time for blackening ratio of segment goes up from 0% to 90% when wave form is switched from non-selected one to selected one. (θ=10°, ϕ=90°)

Note 2:Required time for blackening ratio of segment goes down from 100% to 10% when wave form is switched from selected one to non-selected one. (θ=10°, ϕ=90°)

■PIN ASSIGNMENT

	Pin No.	Symbol	Level	Function
CN 2	1	FLM	H	Frame Signal
	2	LP	H→L	Data Latch Signal
	3	CP	H→L	Clock Signal for Shifting Serial Data
	4	M	H/L	Alternate Signal for LCD Drive
	5	Vcc	—	Power Supply for Logic (+5V)
	6	Vss	—	Power Supply (0V,GND)
	7	VEE	—	Power Supply for LCD Drive
	8	DI	H/L	Display Data
	9	NC	—	No Connection
	10	NC	—	〃
CN 1	1	EL	—	Power Supply for EL
	2	EL	—	〃

■BLOCK DIAGRAM

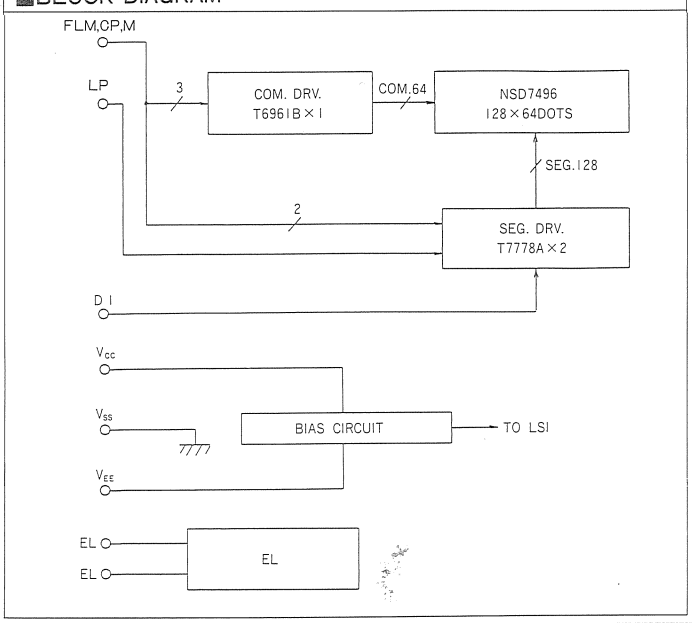

■PIN NBR. LAYOUT (BOTTOM VIEW)

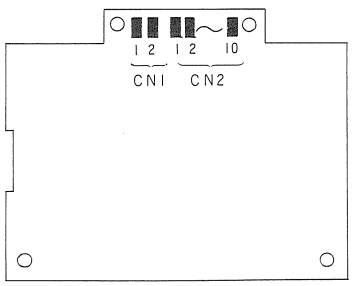

Important

Please refer to page 8 for Example of Power Supply and Power Supply ON/OFF Timing.

EXTERNAL DIMENSIONS

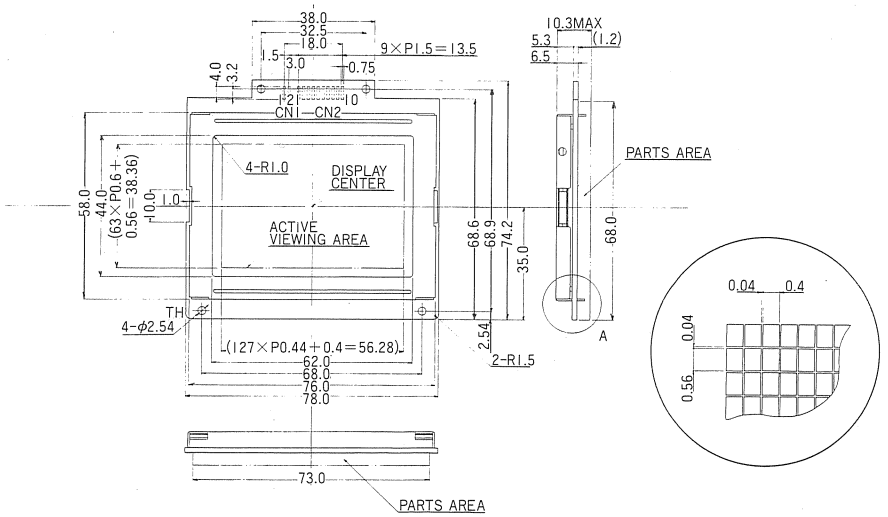

TIMING CHARACTERISTICS

Item	Symbol	min.	max	Unit
CP Pulse Width	t_{CWH}, t_{CWL}	95	—	ns
CP Rise/Fall Time	t_R, t_F	—	30	ns
LP Set Up Time	t_{LRP}	40	—	ns
LP Hold Time	t_{LFP}	75	—	ns
LP Pulse Width	t_{LW}	70	—	ns
Data Set Up Time	t_{DSU}	50	—	ns
Data Hold Time	t_{DHD}	60	—	ns
CP→LP Rise Time	t_{SL}	10	—	ns
LP→CP Fall Time	t_{LS}	10	—	ns
Frame Signal Set Up Time	t_{FSU}	5	—	ns
Frame Signal Hold Time	t_{FHD}	25	—	ns

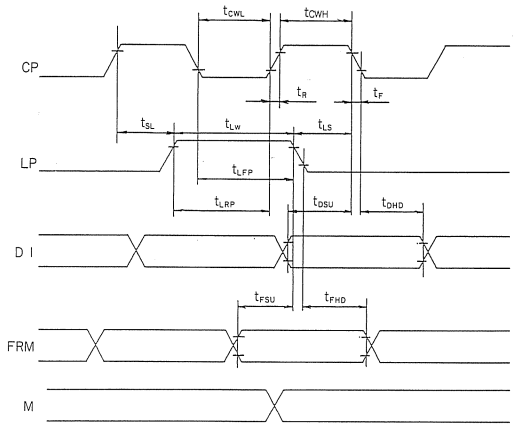

INTERFACE TIMING

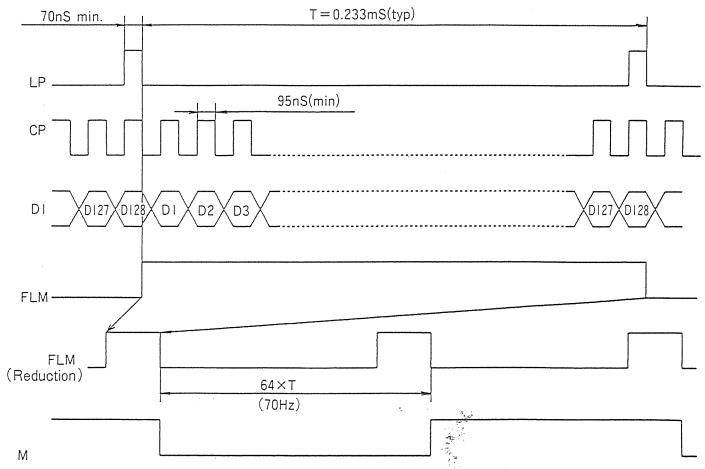

Comparison between Display and Data (Top View)