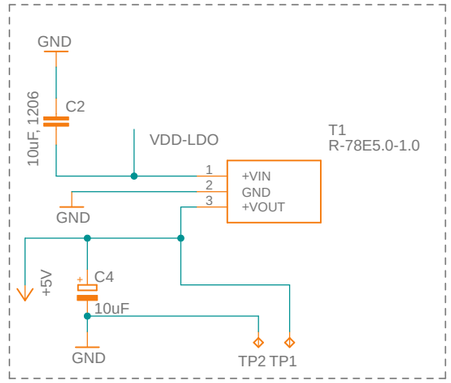
GND
C2
10uF, 1206
VDD-LDO
T1
R-78E5.0-1.0
+VIN
GND
+VOUT
GND
+5V
C4
10uF
GND
TP2 TP1

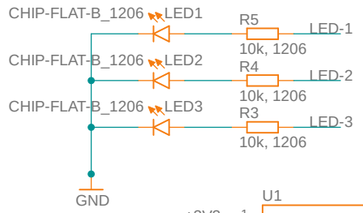
CHIP-FLAT-B_1206
LED1
R5
LED-1
10k, 1206
CHIP-FLAT-B_1206
LED2
R4
LED-2
10k, 1206
CHIP-FLAT-B_1206
LED3
R3
LED-3
10k, 1206
GND

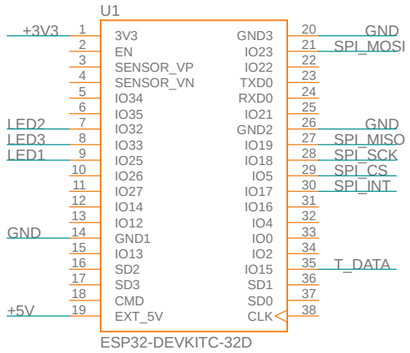
U1
+3V3
3V3
EN
SENSOR_VP
SENSOR_VN
IO34
IO35
IO32
IO33
IO25
IO26
IO27
IO14
IO12
GND1
IO13
SD2
SD3
CMD
EXT_5V
GND3
IO23
IO22
TXD0
RXD0
IO21
GND2
IO19
IO18
IO5
IO17
IO16
IO4
IO0
IO2
IO15
SD1
SD0
CLK
GND
SPI_MOSI
GND
SPI_MISO
SPI_SCK
SPI_CS
SPI_INT
T_DATA
LED2
LED3
LED1
GND
+5V
ESP32-DEVKITC-32D

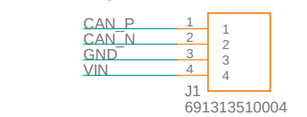
Header: 691313510004
Plug: 691351500004
CAN_P
CAN_N
GND
VIN
J1
691313510004

JP2
VIN
VDD-LDO

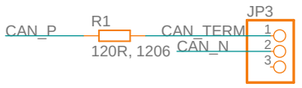
JP3
CAN_P
R1
120R, 1206
CAN_TERM
CAN_N

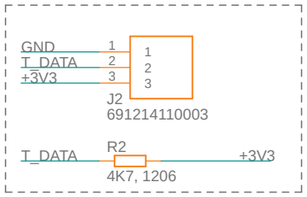
GND
T_DATA
+3V3
J2
691214110003
T_DATA
R2
4K7, 1206
+3V3

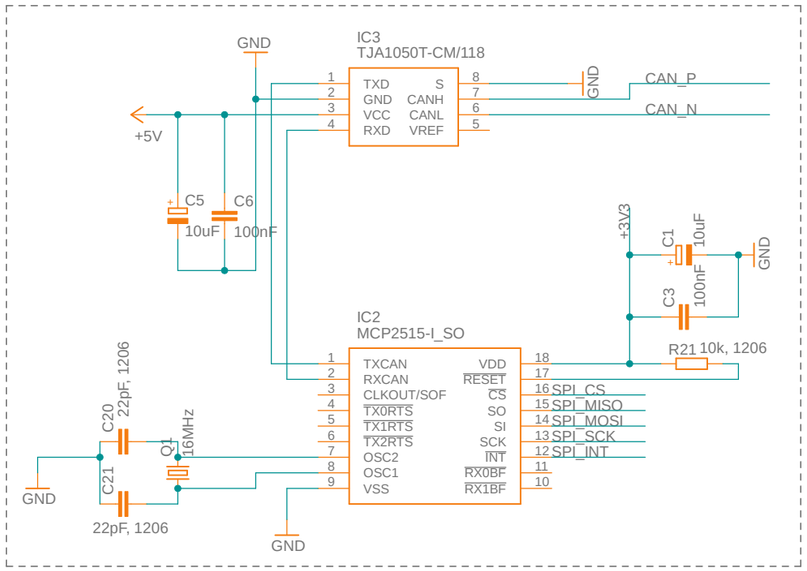
GND
IC3
TJA1050T-CM/118
TXD
GND
VCC
RXD
S
CANH
CANL
VREF
GND
CAN_P
CAN_N
+5V
C5
10uF
C6
100nF
+3V3
C1
10uF
GND
C3
100nF
IC2
MCP2515-I_SO
R21 10k, 1206
TXCAN
RXCAN
CLKOUT/SOF
TX0RTS
TX1RTS
TX2RTS
OSC2
OSC1
VSS
VDD
RESET
CS
SO
SI
SCK
INT
RX0BF
RX1BF
SPI_CS
SPI_MISO
SPI_MOSI
SPI_SCK
SPI_INT
C20
22pF, 1206
Q1
16MHz
C21
22pF, 1206
GND
GND