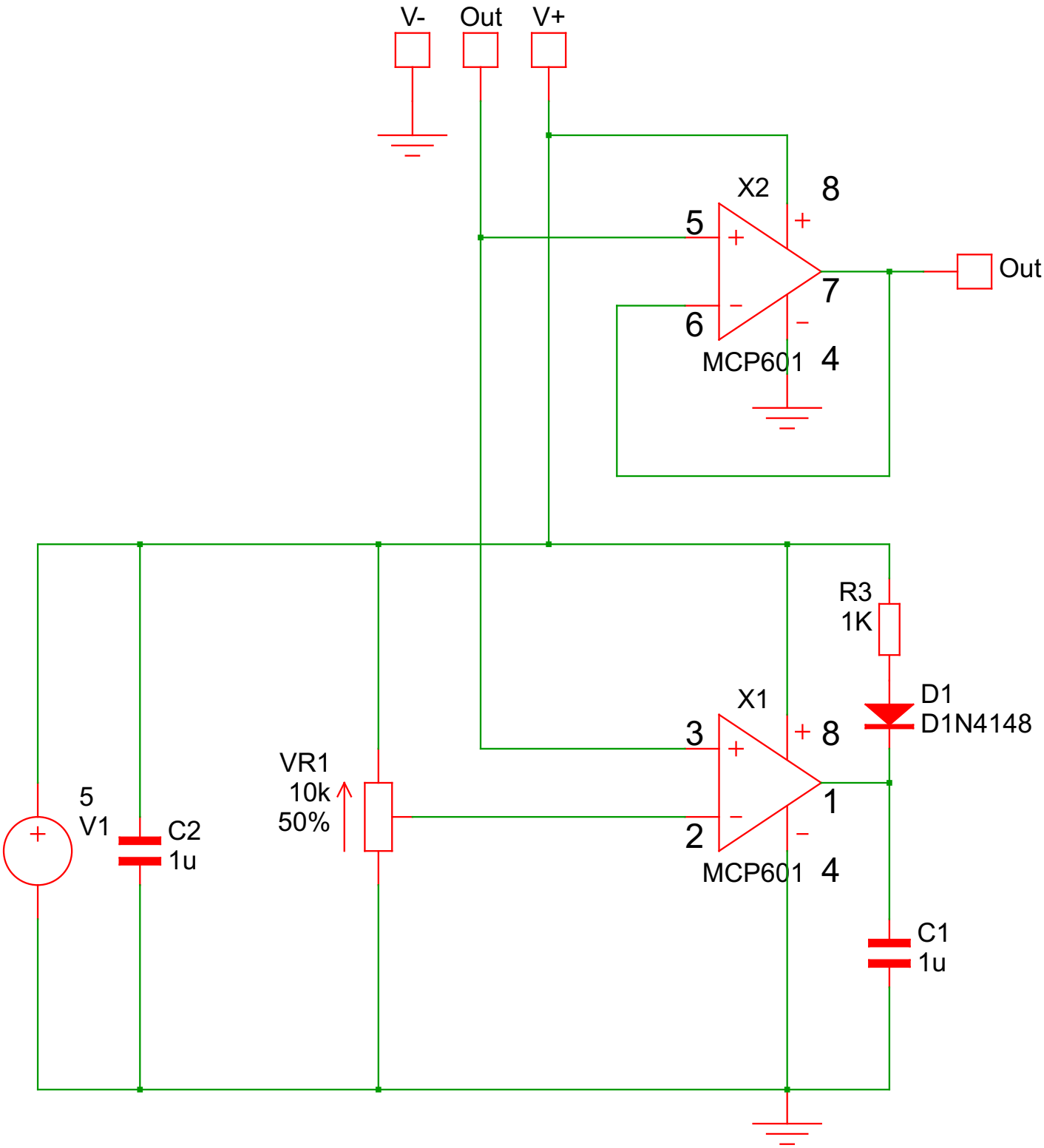
V-
Out
V+
X2
8
5
+
7
Out
6
MCP601
4
R3
1K
D1
D1N4148
X1
3
+
8
VR1
10k
50%
1
5
V1
C2
1u
2
MCP601
4
C1
1u

WCS1800.wxsch

Attachments

Sheet: 1/1