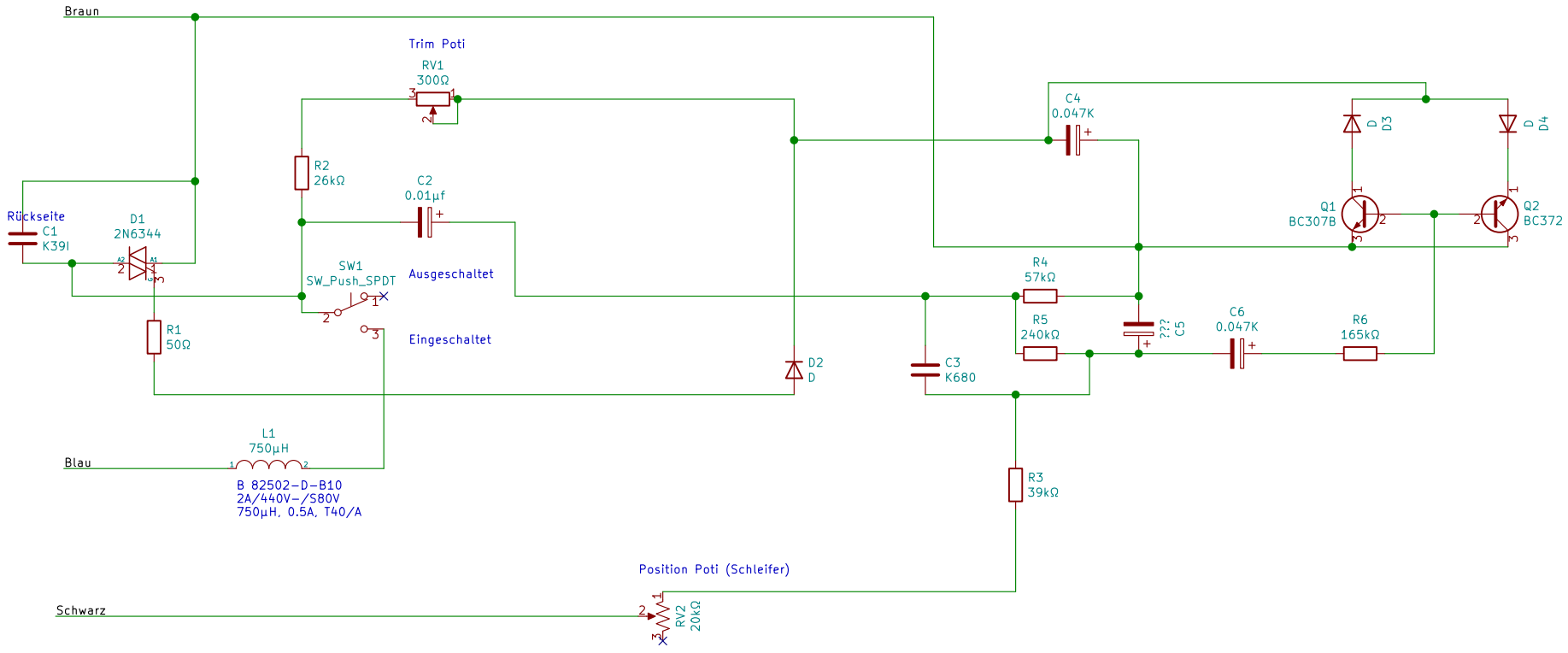

Sheet: /
File: NähmaschineFusspedal.sch

Title:

Size: A4	Date:	Rev:
KiCad E.D.A. kicad 5.1.7-a382d34a888ubuntu18.04.1		Id: 1/1