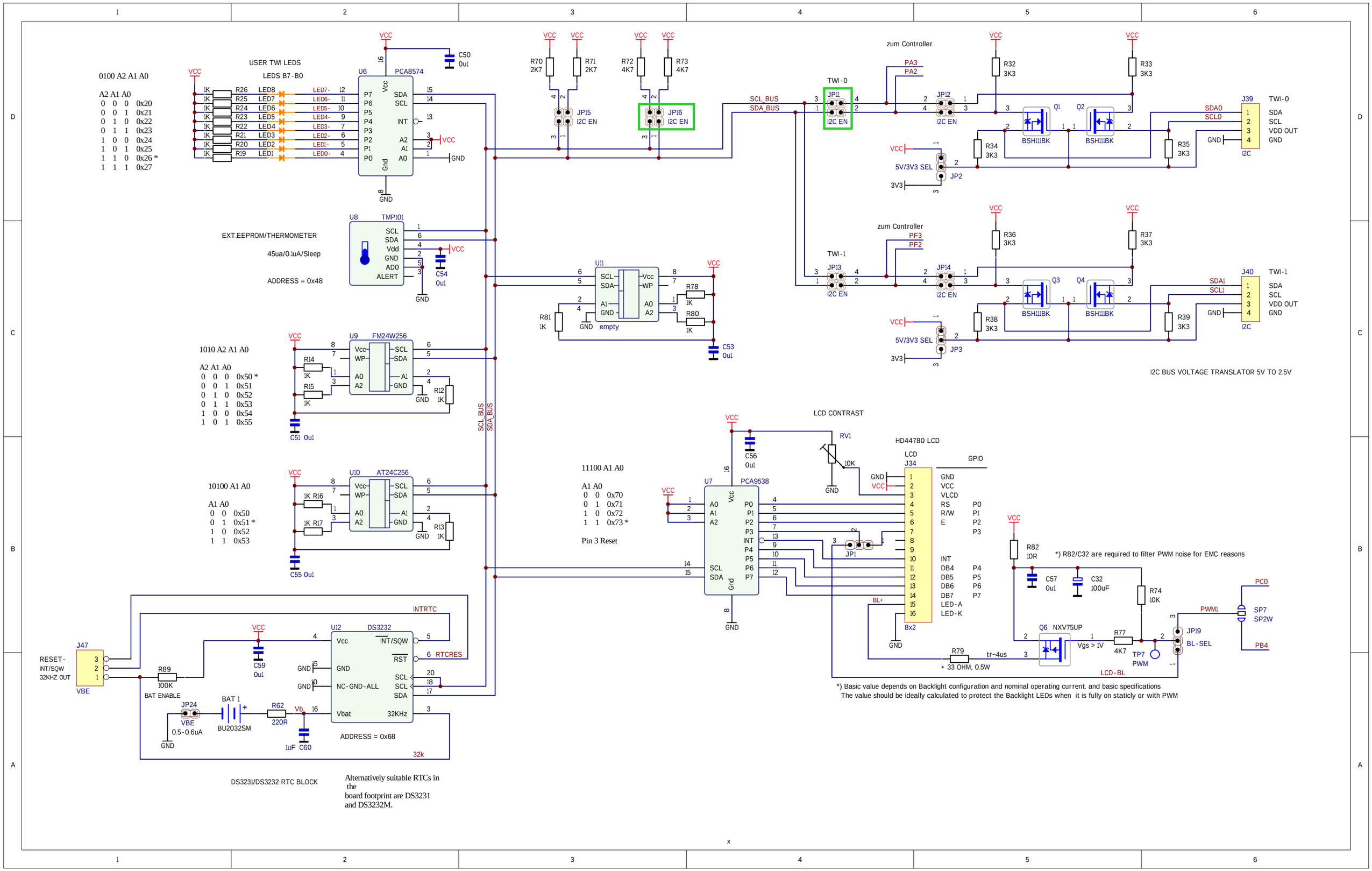
0100 A2 A1 A0
A2 A1 A0
0 0 0 0x20
0 0 1 0x21
0 1 0 0x22
0 1 1 0x23
1 0 0 0x24
1 0 1 0x25
1 1 0 0x26 *
1 1 1 0x27
USER TWI LEDS
LEDS B7-B0
U6 PCA8574
EXT.EEPROM/THERMOMETER
45ua/0.1uA/Sleep
ADDRESS = 0x48
U8 TMP101
1010 A2 A1 A0
A2 A1 A0
0 0 0 0x50 *
0 0 1 0x51
0 1 0 0x52
0 1 1 0x53
1 0 0 0x54
1 0 1 0x55
U9 FM24W256
10100 A1 A0
A1 A0
0 0 0x50
0 1 0x51 *
1 0 0x52
1 1 0x53
U10 AT24C256
JP15 I2C EN
JP16 I2C EN
U11
empty
SCL_BUS
SDA_BUS
zum Controller
TWI-0
TWI-1
JP11 I2C EN
JP12 I2C EN
JP13 I2C EN
JP14 I2C EN
5V/3V3 SEL
BSH111BK
J39 TWI-0
J40 TWI-1
SDA
SCL
VDD OUT
GND
I2C
I2C BUS VOLTAGE TRANSLATOR 5V TO 2.5V
LCD CONTRAST
RV1 10K
HD44780 LCD
LCD J34
GPIO
11100 A1 A0
A1 A0
0 0 0x70
0 1 0x71
1 0 0x72
1 1 0x73 *
Pin 3 Reset
U7 PCA9538
8x2
*) R82/C32 are required to filter PWM noise for EMC reasons
Q6 NXV75UP
Vgs > 1V
tr~4us
* 33 OHM, 0.5W
LCD-BL
PWM1
PC0
PB4
SP7 SP2W
JP19 BL-SEL
TP7 PWM
*) Basic value depends on Backlight configuration and nominal operating current. and basic specifications
The value should be ideally calculated to protect the Backlight LEDs when it is fully on staticly or with PWM
J47
RESET-
INT/SQW
32KHZ OUT
VBE
R89 100K
BAT ENABLE
JP24 VBE 0.5-0.6uA
BAT 1 BU2032SM
R62 220R
U12 DS3232
INTRTC
RTCRES
NC-GND-ALL
32KHz
ADDRESS = 68
32k
DS3231/DS3232 RTC BLOCK
Alternatively suitable RTCs in the
board footprint are DS3231
and DS3232M.