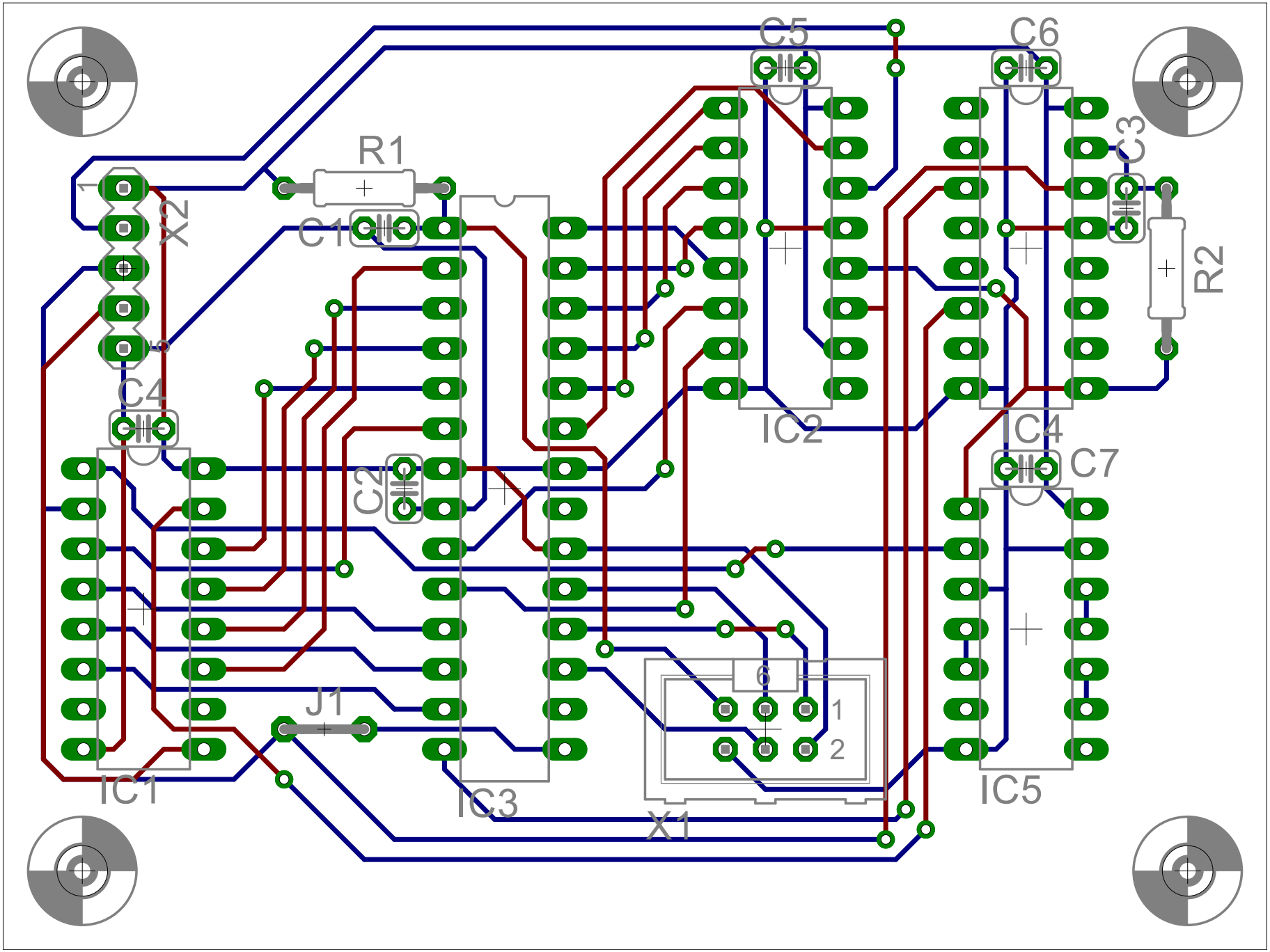
C5
C6
R1
C3
X2
C1
R2
C4
IC2
IC4
C7
C2
6
1
2
J1
IC1
IC3
X1
IC5