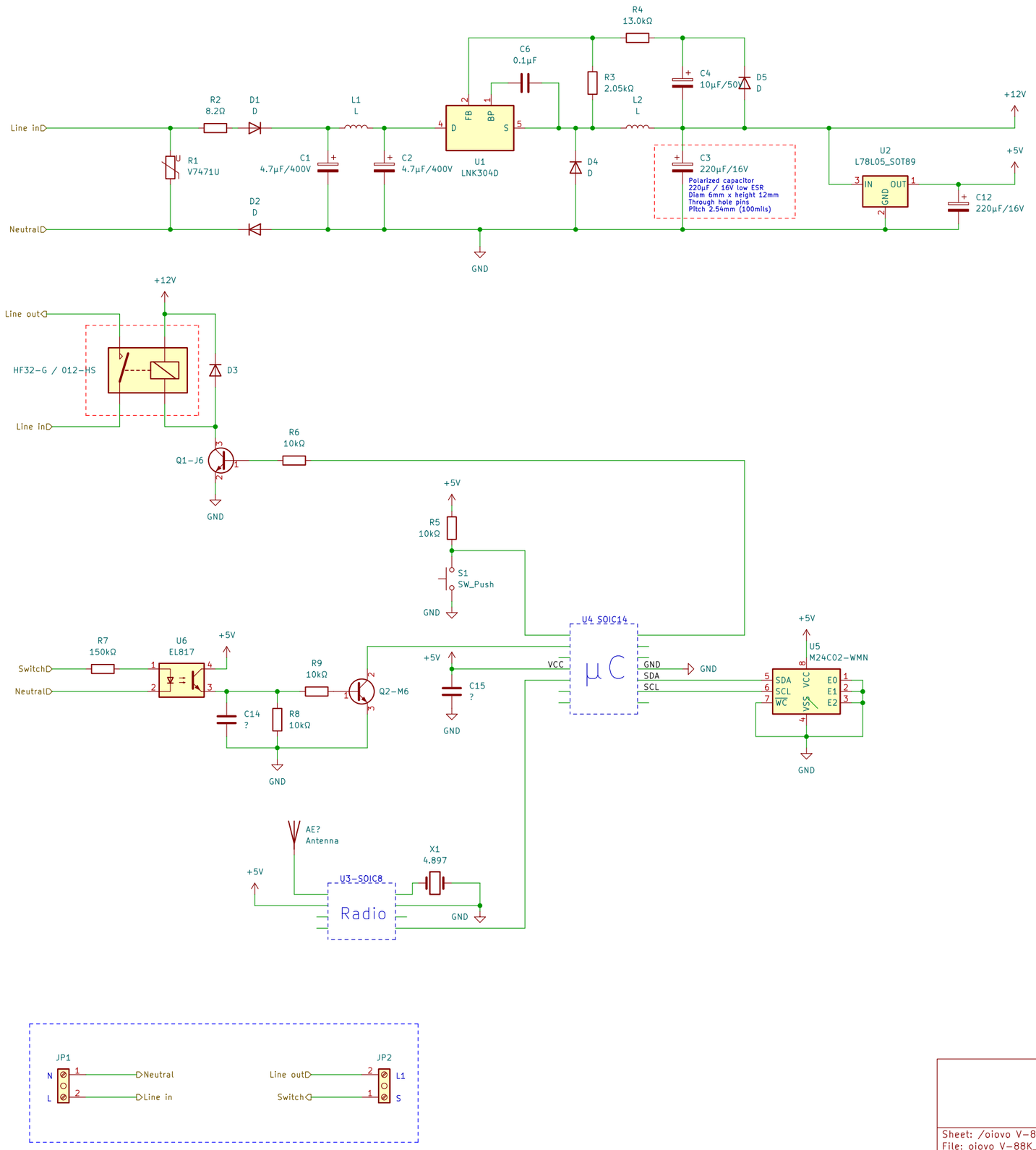

Sheet: /oiovo V-88K_Pro/
File: oiovo V-88K_Pro.kicad_sch

Title: LCD Transformer

Size: A3	Date:	Rev:
KiCad E.D.A. kicad (6.0.6)		Id: 2/2