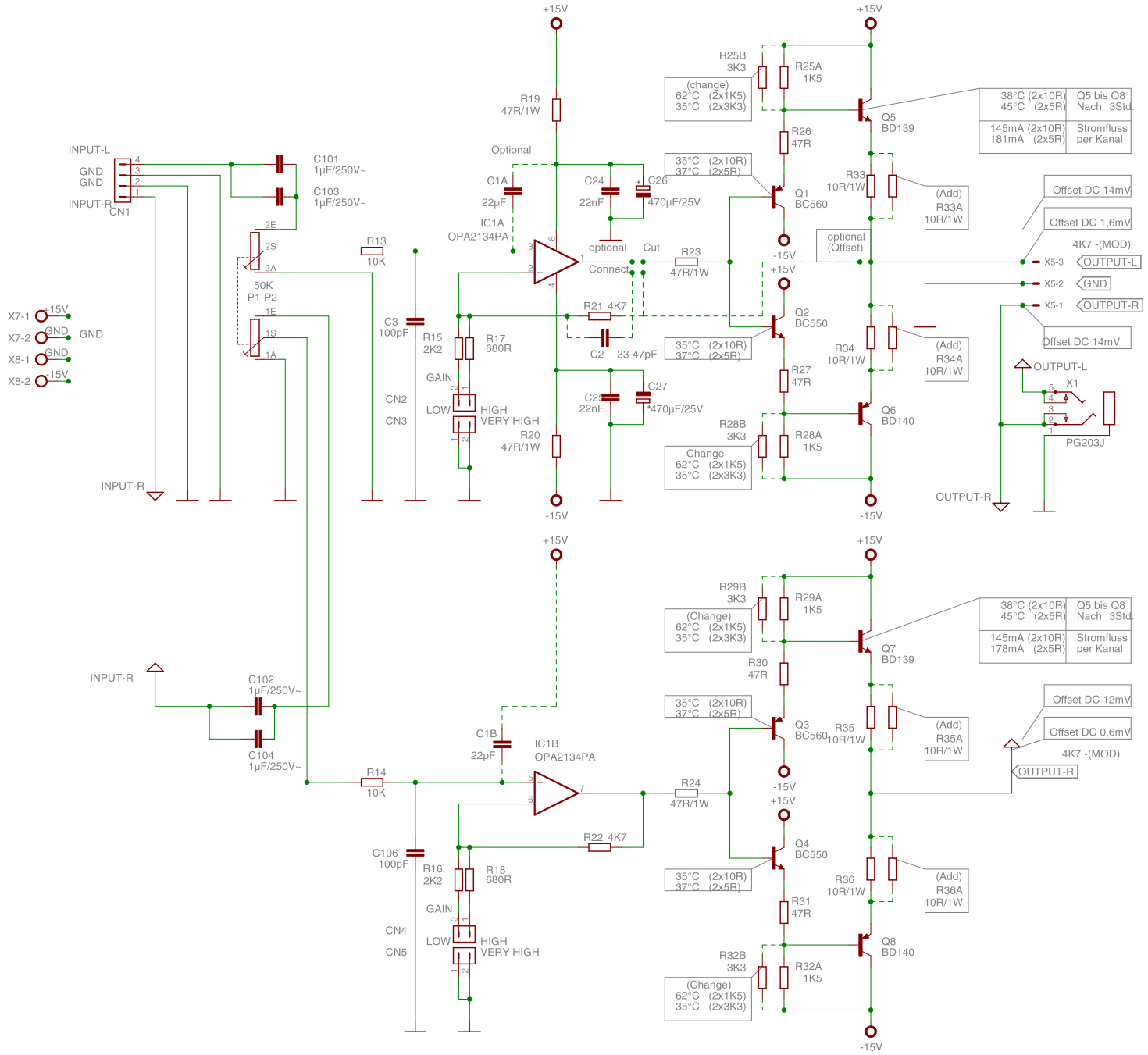
+15V
-15V
INPUT-L
GND
GND
INPUT-R
CN1
C101
1µF/250V~
C103
1µF/250V~
50K
P1-P2
R13
10K
C3
100pF
R15
2K2
R17
680R
GAIN
LOW
HIGH
VERY HIGH
CN2
CN3
R19
47R/1W
R20
47R/1W
Optional
C1A
22pF
IC1A
OPA2134PA
C24
22nF
C26
470µF/25V
optional
Connect
Cut
R23
47R/1W
R21 4K7
C2 33-47pF
C25
22nF
C27
470µF/25V
R25B
3K3
R25A
1K5
(change)
62°C (2x1K5)
35°C (2x3K3)
R26
47R
35°C (2x10R)
37°C (2x5R)
Q1
BC560
R27
47R
Q2
BC550
R28B
3K3
R28A
1K5
Change
62°C (2x1K5)
35°C (2x3K3)
Q5
BD139
Q6
BD140
R33
10R/1W
R34
10R/1W
(Add)
R33A
10R/1W
(Add)
R34A
10R/1W
optional
(Offset)
38°C (2x10R)
45°C (2x5R)
Q5 bis Q8
Nach 3Std.
145mA (2x10R)
181mA (2x5R)
Stromfluss
per Kanal
Offset DC 14mV
Offset DC 1,6mV
4K7 -(MOD)
X5-3
OUTPUT-L
X5-2
GND
X5-1
OUTPUT-R
Offset DC 14mV
OUTPUT-L
X1
PG203J
OUTPUT-R
X7-1
X7-2
X8-1
X8-2
C102
1µF/250V~
C104
1µF/250V~
R14
10K
C106
100pF
R16
2K2
R18
680R
CN4
CN5
C1B
22pF
IC1B
OPA2134PA
R22 4K7
R24
47R/1W
R29B
3K3
R29A
1K5
(Change)
62°C (2x1K5)
35°C (2x3K3)
R30
47R
Q3
BC560
R31
47R
Q4
BC550
R32B
3K3
R32A
1K5
Q7
BD139
Q8
BD140
R35
10R/1W
R36
10R/1W
(Add)
R35A
10R/1W
(Add)
R36A
10R/1W
38°C (2x10R)
45°C (2x5R)
Q5 bis Q8
Nach 3Std.
145mA (2x10R)
178mA (2x5R)
Stromfluss
per Kanal
Offset DC 12mV
Offset DC 0,6mV
4K7 -(MOD)
OUTPUT-R