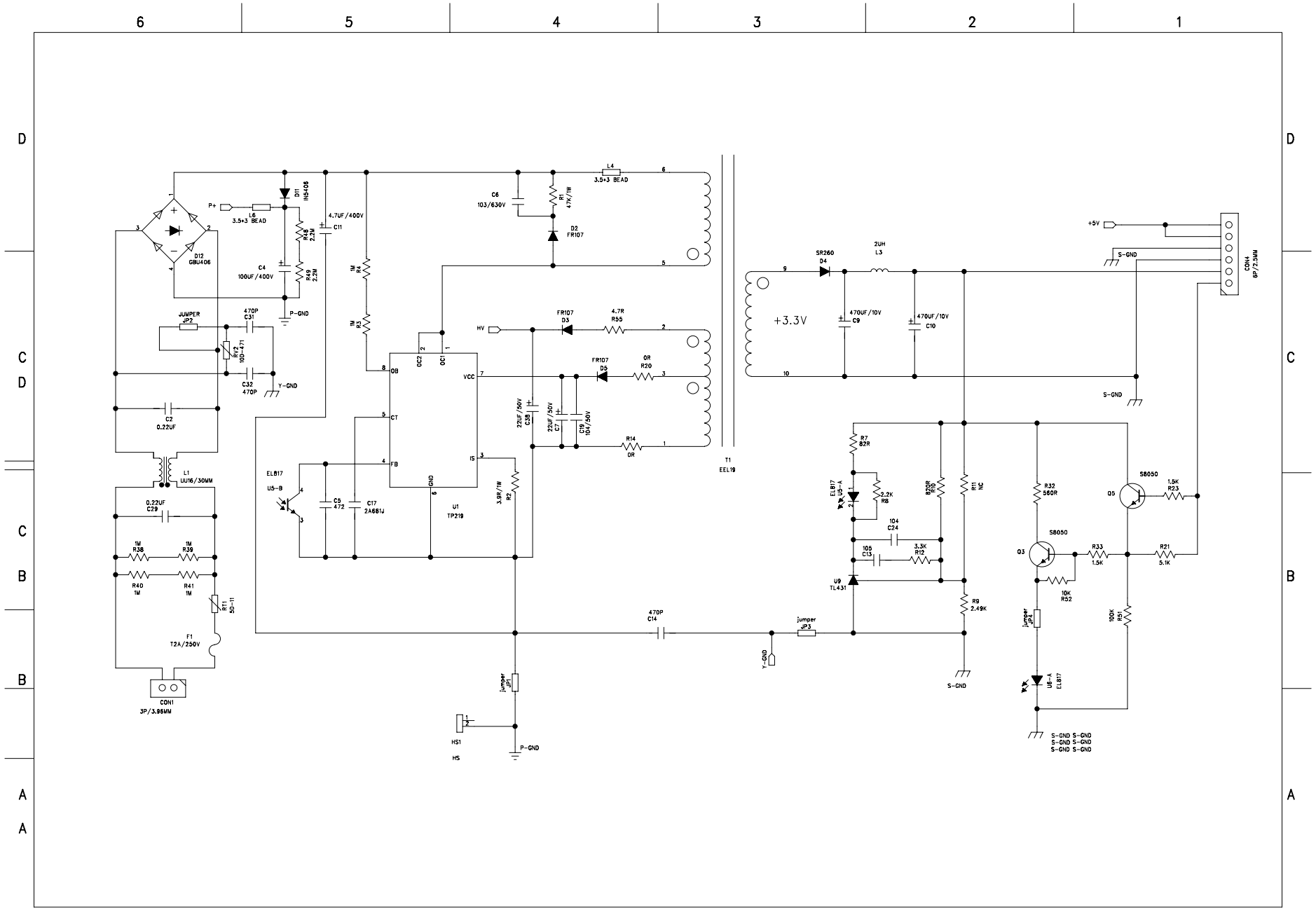
P+
L6
3.5+3 BEAD
D11
1N5406
D12
GBU406
R46
2.2M
R49
2.2M
C4
100UF/400V
4.7UF/400V
C11
P-GND
JUMPER
JP2
470P
C31
RV2
10D-471
C32
470P
Y-GND
C2
0.22UF
L1
UU16/30MM
0.22UF
C29
1M
R38
1M
R39
R40
1M
R41
1M
PT1
SD-11
F1
T2A/250V
CON1
3P/3.96MM
1M
R4
1M
R3
ELB17
U5-B
C5
472
C17
2A681J
OC2
OC1
OB
CT
FB
GND
VCC
IS
U1
TP219
3.9R/1W
R2
Jumper
JP1
HS1
HS
P-GND
C6
103/630V
R1
47K/1W
D2
FR107
L4
3.5+3 BEAD
HV
FR107
D3
4.7R
R55
FR107
D5
0R
R20
22UF/50V
C18
22UF/50V
C7
C19
104/50V
R14
0R
T1
EEL19
470P
C14
Y-GND
Jumper
JP3
+3.3V
SR260
D4
2UH
L3
470UF/10V
C9
470UF/10V
C10
S-GND
+5V
S-GND
CON4
6P/2.5MM
R7
82R
ELB17
U5-A
2.2K
R8
820R
R10
R11
NC
104
C24
105
C13
3.3K
R12
U9
TL431
R9
2.49K
S-GND
R32
560R
S8050
Q3
10K
R52
Jumper
JP4
U6-A
ELB17
S8050
Q5
1.5K
R23
R33
1.5K
R21
5.1K
100K
R51
S-GND S-GND
S-GND S-GND
S-GND S-GND

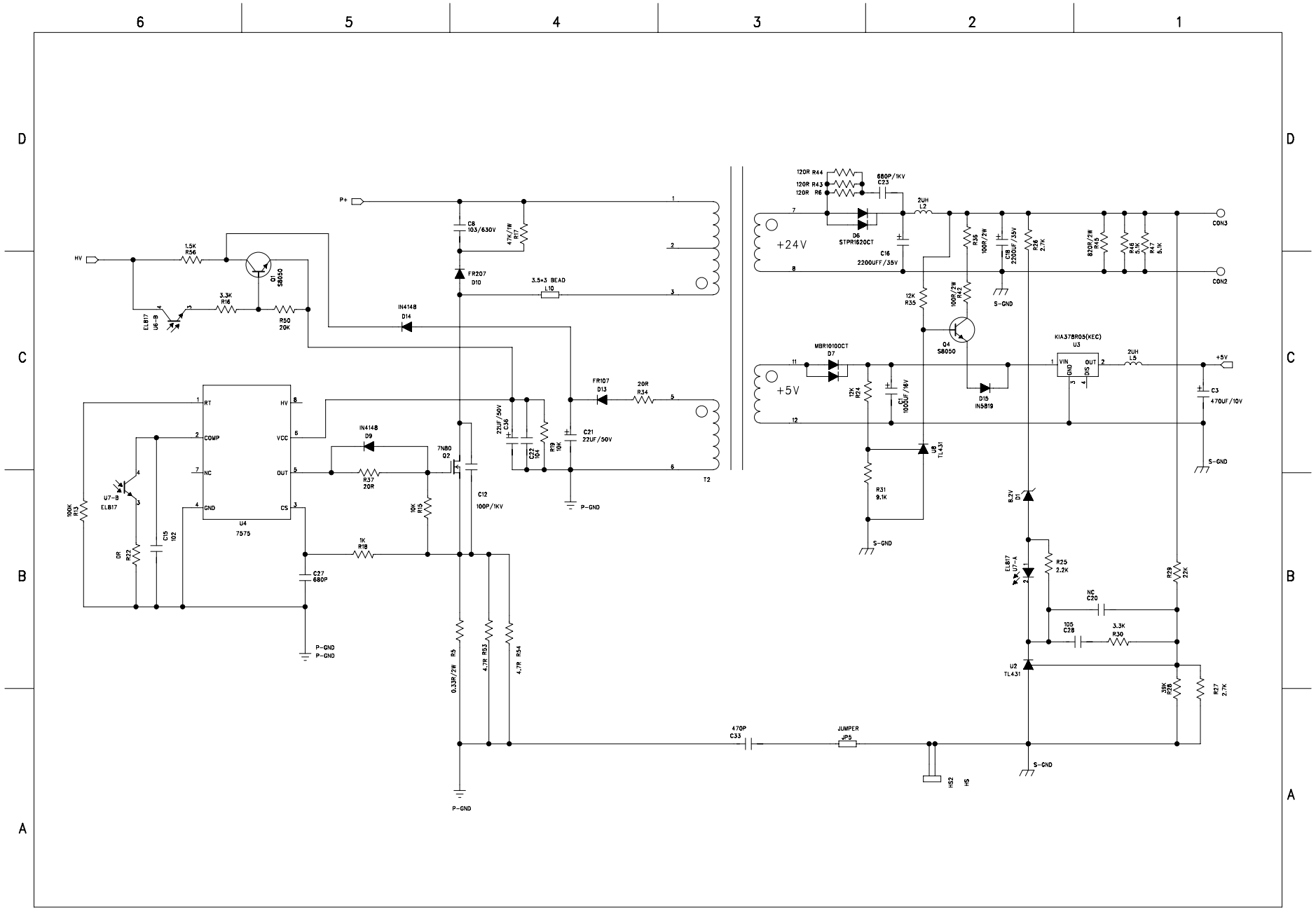
HV
1.5K R56
Q1 S8050
3.3K R16
R50 20K
EL817 U6-B
P+
C8 103/630V
47K/1W R17
FR207 D10
3.5+3 BEAD L10
IN4148 D14
FR107 D13
20R R34
C21 22UF/50V
T2
P-GND
RT
COMP
NC
GND
HV
VCC
OUT
CS
U4 7575
IN4148 D9
R37 20R
7N80 Q2
22UF/50V C36
C22 104
R19 10K
C12 100P/1KV
100K R13
U7-B EL817
DR R22
C15 102
1K R18
C27 680P
10K R15
0.33R/2W R5
4.7R R53
4.7R R54
470P C33
JUMPER JP5
HS2
HS
+24V
120R R44
120R R43
120R R6
680P/1KV C23
D6 STPR1620CT
C16 2200UFF/35V
2UH L2
R36 100R/2W
C18 2200UF/35V
R26 2.7K
820R/2W R42
R46 5.6K
R47 5.1K
CON3
CON2
S-GND
12K R35
100R/2W R32
Q4 S8050
+5V
MBR10100CT D7
12K R24
C1 100UF/16V
D15 IN5819
U3 TL431
R31 9.1K
KIA378R05(KEC) U3
VIN
GND
OUT
DS
2UH L5
+5V
C3 470UF/10V
8.2V D1
EL817 U7-A
R25 2.2K
NC C20
105 C28
3.3K R30
U2 TL431
R29 22K
39K R28
R27 2.7K