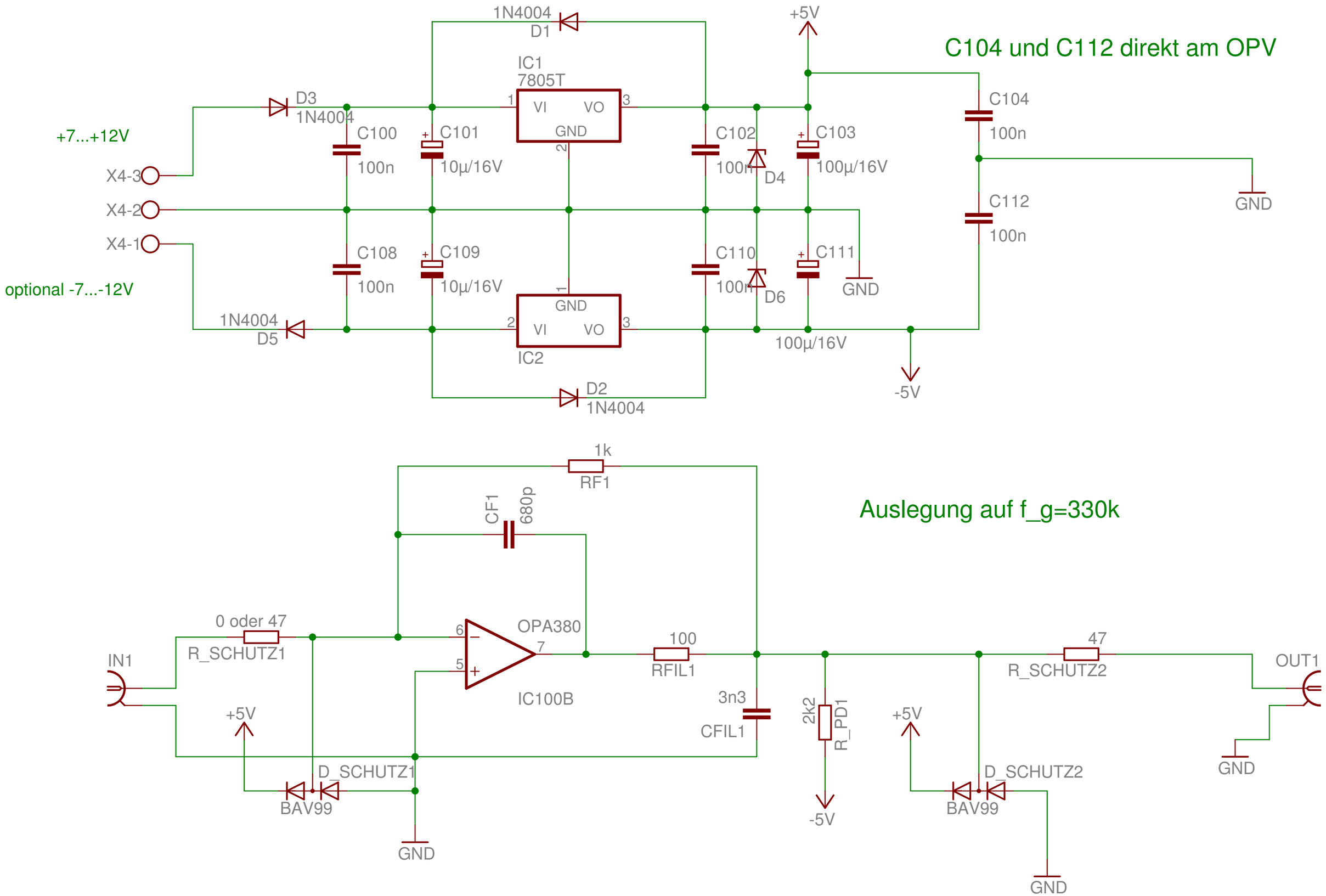

29.08.09 13:52 f=2.00 /home/lenz/eagle/Photodiode/photodiode_forum2.sch (Sheet: 1/1)