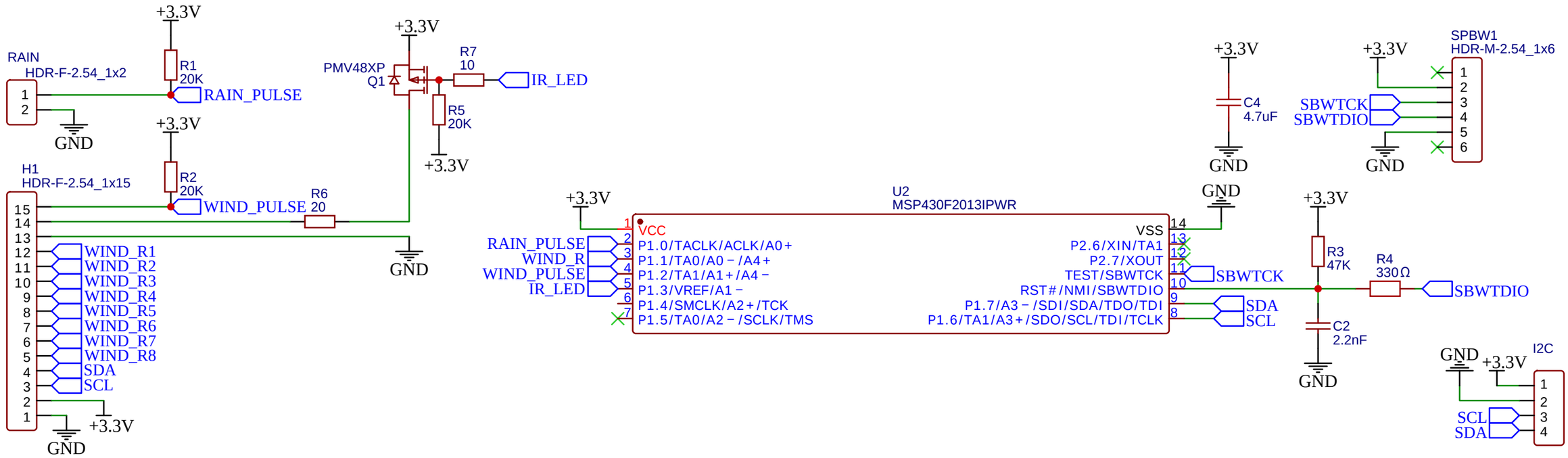

TITLE: Bresser 5in1 I2C		REV: 1.0
嘉立创EDA	Company: Your Company	Sheet: 1/1
	Date: 2022-10-30 Drawn By: Lordcyber	