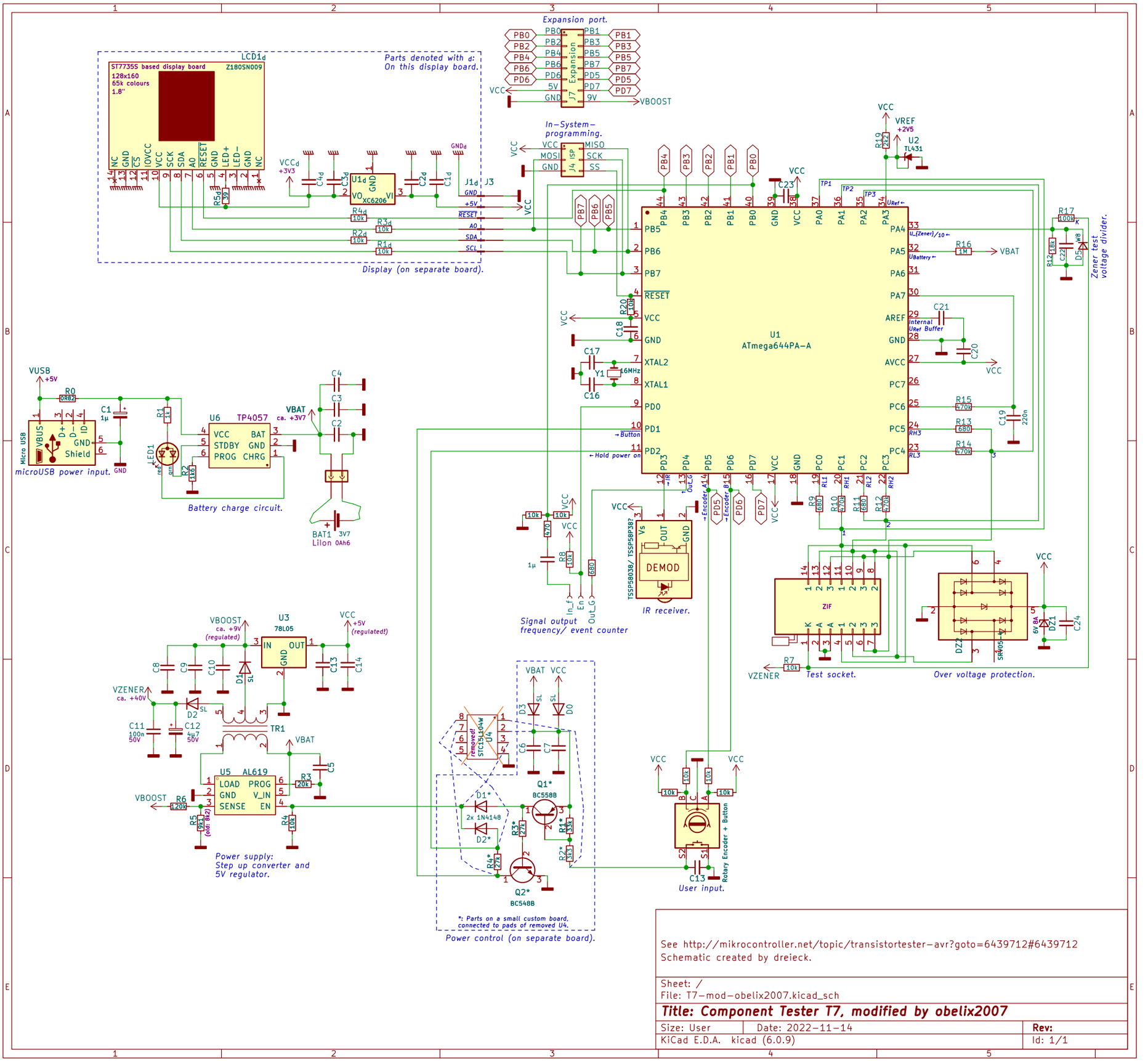
Expansion port.
Parts denoted with d:
On this display board.
LCD1d
ST7735S based display board
Z180SN009
128x160
65k colours
1.8"
Display (on separate board).
In-System-programming.
U1
ATmega644PA-A
U2
TL431
VREF
+2V5
Zener test voltage divider.
microUSB power input.
Battery charge circuit.
U6
TP4057
BAT1
LiIon 0Ah6
Signal output frequency/ event counter
IR receiver.
TSSP58038/ TSSP58P38?
DEMOD
ZIF
Test socket.
Over voltage protection.
U3
78L05
VBOOST
ca. +9V
(regulated)
VZENER
ca. +40V
U5
AL619
Power supply:
Step up converter and
5V regulator.
Power control (on separate board).
*: Parts on a small custom board,
connected to pads of removed U4.
Rotary Encoder + Button
User input.
See http://mikrocontroller.net/topic/transistortester-avr?goto=6439712#6439712
Schematic created by dreieck.
Sheet: /
File: T7-mod-obelix2007.kicad_sch
Title: Component Tester T7, modified by obelix2007
Size: User
Date: 2022-11-14
Rev:
KiCad E.D.A. kicad (6.0.9)
Id: 1/1