Alt 1: MCU adjustable power: add U1 and R1
Alt 2: fixed power: add R2 and R3

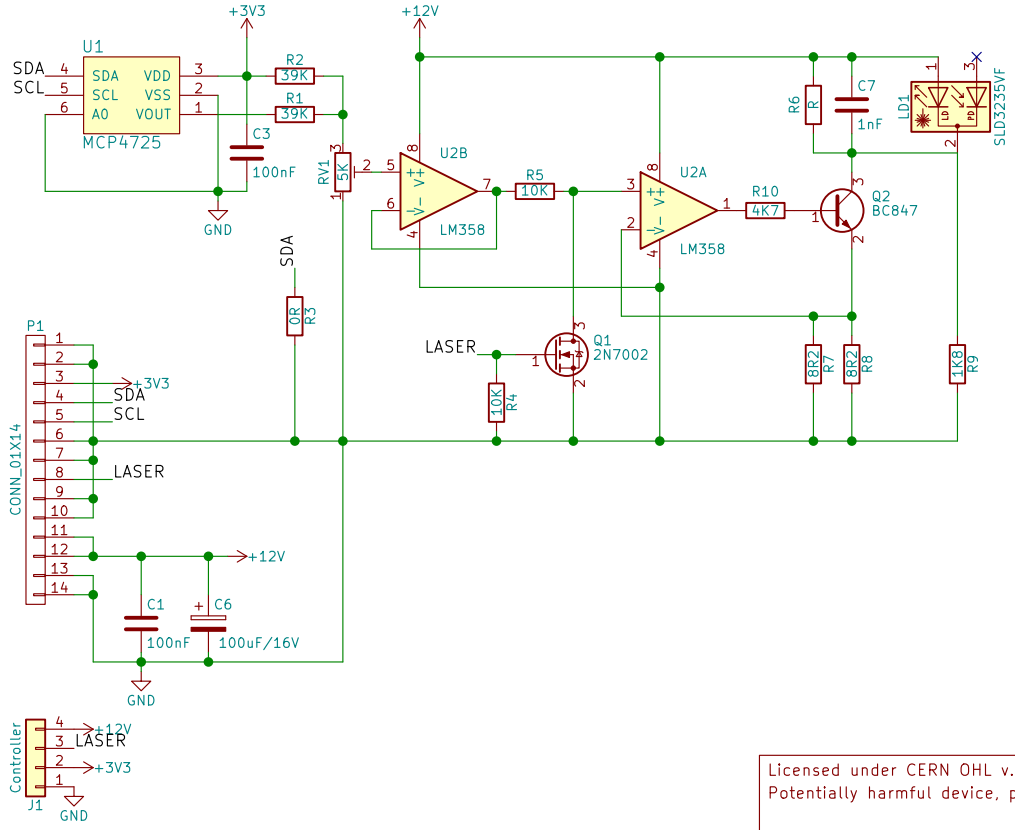

Licensed under CERN OHL v.1.2 or later
Potentially harmful device, please observe relevant safety rules!

Terje Io
Io Engineering

Sheet: /
File: Driver.sch

Title: PCB Laser Exposer – Diode Driver

Size: A4	Date: 2018-06-20	**Rev: 2**
KiCad E.D.A. kicad (6.0.0-rc1-dev-1481-g5e705347b)		Id: 1/1