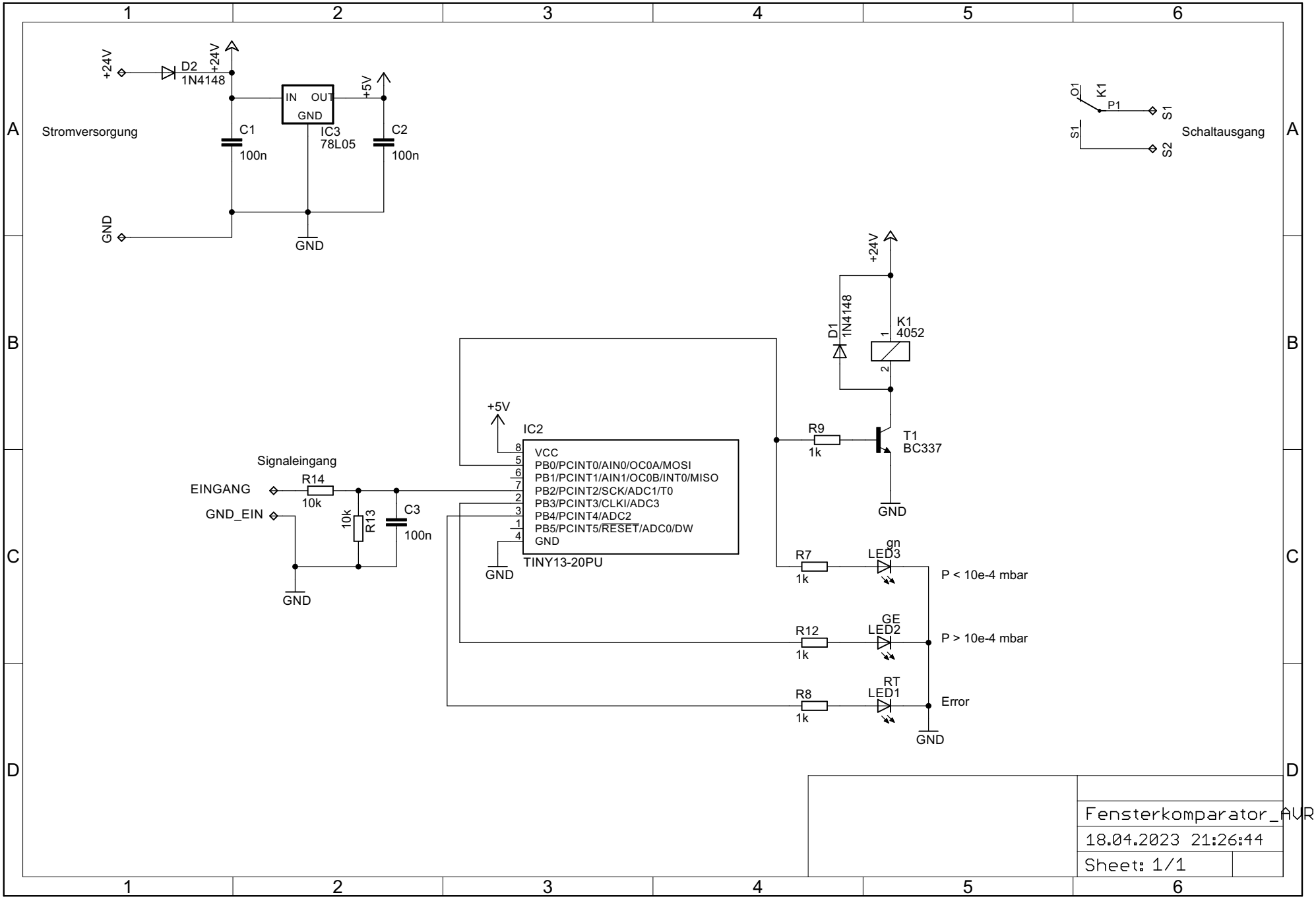
Stromversorgung
+24V
D2
1N4148
+24V
IN
OUT
GND
IC3
78L05
+5V
C1
100n
C2
100n
GND
GND
Schaltausgang
O1
K1
P1
S1
S1
S2
+24V
D1
1N4148
K1
4052
1
2
R9
1k
T1
BC337
GND
+5V
IC2
VCC
PB0/PCINT0/AIN0/OC0A/MOSI
PB1/PCINT1/AIN1/OC0B/INT0/MISO
PB2/PCINT2/SCK/ADC1/T0
PB3/PCINT3/CLKI/ADC3
PB4/PCINT4/ADC2
PB5/PCINT5/RESET/ADC0/DW
GND
TINY13-20PU
GND
Signaleingang
EINGANG
GND_EIN
R14
10k
10k
R13
C3
100n
GND
R7
1k
gn
LED3
P < 10e-4 mbar
R12
1k
GE
LED2
P > 10e-4 mbar
R8
1k
RT
LED1
Error
GND
Fensterkomparator_AVR
18.04.2023 21:26:44
Sheet: 1/1