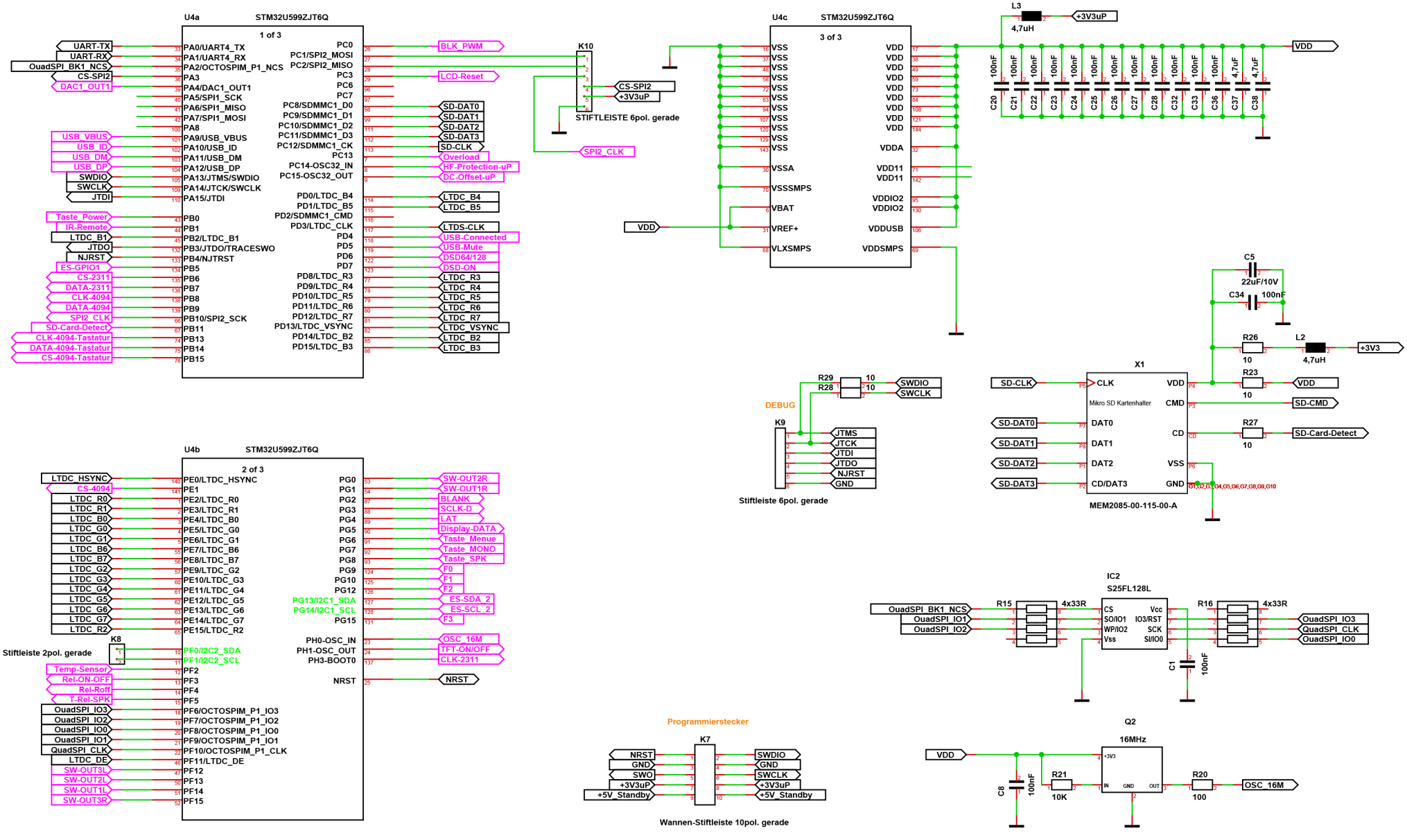
U4a
STM32U599ZJT6Q
1 of 3
PA0/UART4_TX
PA1/UART4_RX
PA2/OCTOSPIM_P1_NCS
PA3
PA4/DAC1_OUT1
PA5/SPI1_SCK
PA6/SPI1_MISO
PA7/SPI1_MOSI
PA8
PA9/USB_VBUS
PA10/USB_ID
PA11/USB_DM
PA12/USB_DP
PA13/JTMS/SWDIO
PA14/JTCK/SWCLK
PA15/JTDI
PB0
PB1
PB2/LTDC_B1
PB3/JTDO/TRACESWO
PB4/NJTRST
PB5
PB6
PB7
PB8
PB9
PB10/SPI2_SCK
PB11
PB13
PB14
PB15
PC0
PC1/SPI2_MOSI
PC2/SPI2_MISO
PC3
PC6
PC7
PC8/SDMMC1_D0
PC9/SDMMC1_D1
PC10/SDMMC1_D2
PC11/SDMMC1_D3
PC12/SDMMC1_CK
PC13
PC14-OSC32_IN
PC15-OSC32_OUT
PD0/LTDC_B4
PD1/LTDC_B5
PD2/SDMMC1_CMD
PD3/LTDC_CLK
PD4
PD5
PD6
PD7
PD8/LTDC_R3
PD9/LTDC_R4
PD10/LTDC_R5
PD11/LTDC_R6
PD12/LTDC_R7
PD13/LTDC_VSYNC
PD14/LTDC_B2
PD15/LTDC_B3
UART-TX
UART-RX
OuadSPI_BK1_NCS
CS-SPI2
DAC1_OUT1
USB_VBUS
USB_ID
USB_DM
USB_DP
SWDIO
SWCLK
JTDI
Taste_Power
IR-Remote
LTDC_B1
JTDO
NJRST
ES-GPIO1
CS-2311
DATA-2311
CLK-4094
DATA-4094
SPI2_CLK
SD-Card-Detect
CLK-4094-Tastatur
DATA-4094-Tastatur
CS-4094-Tastatur
BLK_PWM
LCD-Reset
SD-DAT0
SD-DAT1
SD-DAT2
SD-DAT3
SD-CLK
Overload
HF-Protection-uP
DC-Offset-uP
LTDC_B4
LTDC_B5
LTDS-CLK
USB-Connected
USB-Mute
DSD64/128
DSD-ON
LTDC_R3
LTDC_R4
LTDC_R5
LTDC_R6
LTDC_R7
LTDC_VSYNC
LTDC_B2
LTDC_B3
K10
STIFTLEISTE 6pol. gerade
CS-SPI2
+3V3uP
SPI2_CLK
U4c
STM32U599ZJT6Q
3 of 3
VSS
VDD
VDDA
VSSA
VDD11
VSSSMPS
VDDIO2
VBAT
VDDUSB
VREF+
VDDSMPS
VLXSMPS
L3
4,7uH
+3V3uP
VDD
100nF
4,7uF
C20
C21
C22
C23
C24
C25
C26
C27
C28
C32
C33
C36
C37
C38
C5
22uF/10V
C34
100nF
R26
10
L2
4,7uH
+3V3
R23
10
R27
10
X1
Mikro SD Kartenhalter
CLK
DAT0
DAT1
DAT2
CD/DAT3
VDD
CMD
CD
VSS
GND
SD-CLK
SD-DAT0
SD-DAT1
SD-DAT2
SD-DAT3
SD-CMD
SD-Card-Detect
MEM2085-00-115-00-A
R29
R28
10
10
SWDIO
SWCLK
DEBUG
K9
JTMS
JTCK
JTDI
JTDO
NJRST
GND
Stiftleiste 6pol. gerade
U4b
STM32U599ZJT6Q
2 of 3
PE0/LTDC_HSYNC
PE1
PE2/LTDC_R0
PE3/LTDC_R1
PE4/LTDC_B0
PE5/LTDC_G0
PE6/LTDC_G1
PE7/LTDC_B6
PE8/LTDC_B7
PE9/LTDC_G2
PE10/LTDC_G3
PE11/LTDC_G4
PE12/LTDC_G5
PE13/LTDC_G6
PE14/LTDC_G7
PE15/LTDC_R2
PF0/I2C2_SDA
PF1/I2C2_SCL
PF2
PF3
PF4
PF5
PF6/OCTOSPIM_P1_IO3
PF7/OCTOSPIM_P1_IO2
PF8/OCTOSPIM_P1_IO0
PF9/OCTOSPIM_P1_IO1
PF10/OCTOSPIM_P1_CLK
PF11/LTDC_DE
PF12
PF13
PF14
PF15
PG0
PG1
PG2
PG3
PG4
PG5
PG6
PG7
PG8
PG9
PG10
PG12
PG13/I2C1_SDA
PG14/I2C1_SCL
PG15
PH0-OSC_IN
PH1-OSC_OUT
PH3-BOOT0
NRST
LTDC_HSYNC
CS-4094
LTDC_R0
LTDC_R1
LTDC_B0
LTDC_G0
LTDC_G1
LTDC_B6
LTDC_B7
LTDC_G2
LTDC_G3
LTDC_G4
LTDC_G5
LTDC_G6
LTDC_G7
LTDC_R2
K8
Stiftleiste 2pol. gerade
Temp-Sensor
Rel-ON-OFF
Rel-Roff
T-Rel-SPK
OuadSPI_IO3
OuadSPI_IO2
OuadSPI_IO0
OuadSPI_IO1
QuadSPI_CLK
LTDC_DE
SW-OUT3L
SW-OUT2L
SW-OUT1L
SW-OUT3R
SW-OUT2R
SW-OUT1R
BLANK
SCLK-D
LAT
Display-DATA
Taste_Menue
Taste_MONO
Taste_SPK
F0
F1
F2
ES-SDA_2
ES-SCL_2
F3
OSC_16M
TFT-ON/OFF
CLK-2311
NRST
IC2
S25FL128L
OuadSPI_BK1_NCS
OuadSPI_IO1
OuadSPI_IO2
R15
4x33R
CS
SO/IO1
WP/IO2
Vss
Vcc
IO3/RST
SCK
SI/IO0
R16
4x33R
OuadSPI_IO3
OuadSPI_CLK
OuadSPI_IO0
C1
100nF
Programmierstecker
K7
NRST
GND
SWO
+3V3uP
+5V_Standby
SWDIO
GND
SWCLK
+3V3uP
+5V_Standby
Wannen-Stiftleiste 10pol. gerade
Q2
16MHz
VDD
C8
100nF
R21
10K
+3V3
IN
GND
OUT
R20
100
OSC_16M