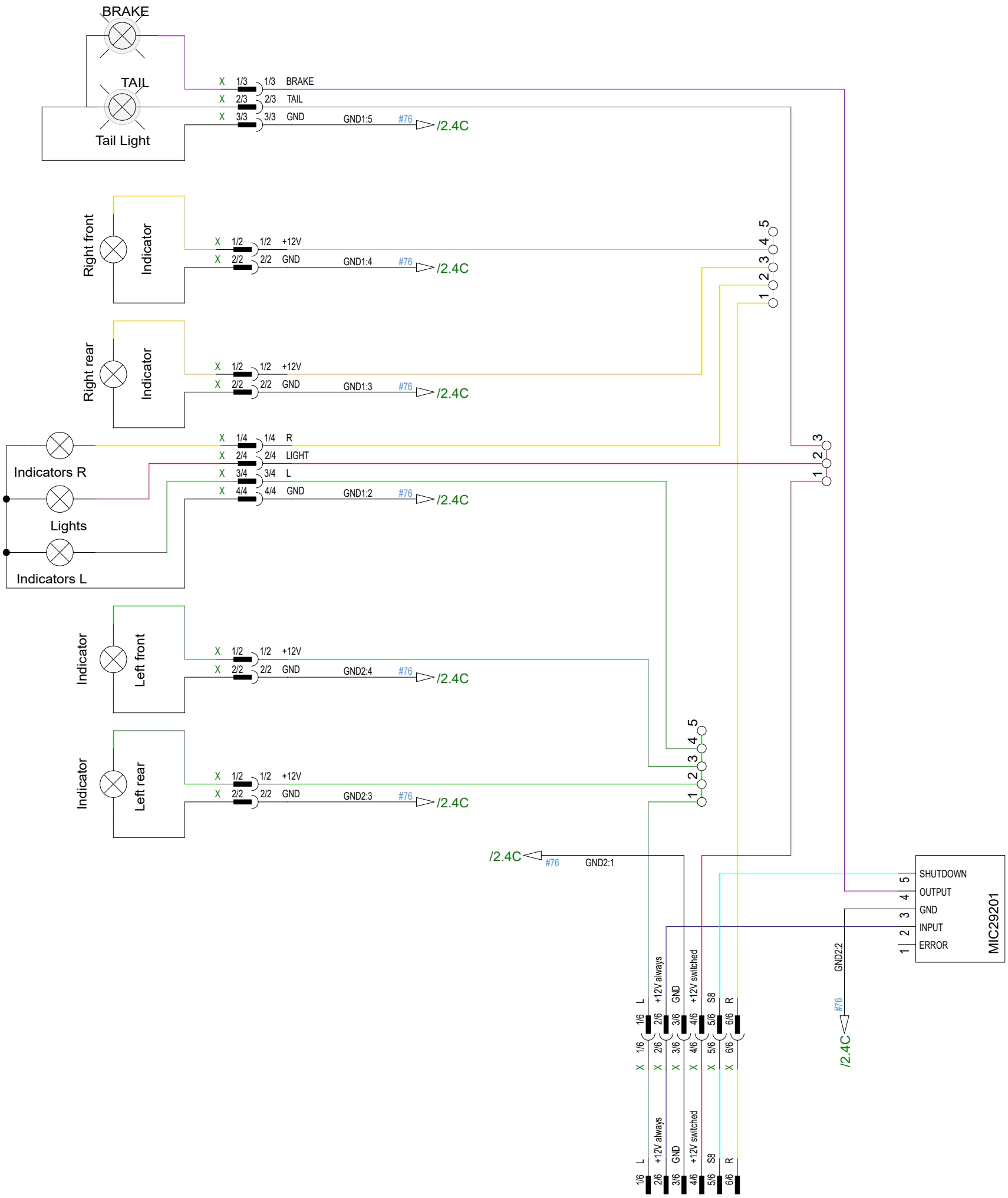

X
X
X
X

12. 11. 2023 01:05
12. 11. 2023
Cruzer_v4_Blinker_one_side_2_floors
S/1 Ð/1

Ƥ/1

ƚ/1 1 2 ƛ/1
Ɲ/1
Ɯ/1
Ơ/1
9/1 Ƣ/1 ƞ/1 ơ/1
&#20;/1 9/1
ţ/1
Ɵ/1

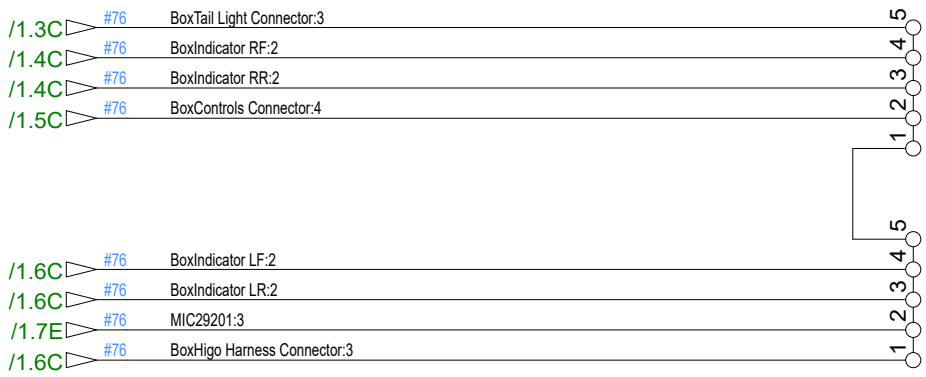
/1.3C
#76
BoxTail Light Connector:3
/1.4C
#76
BoxIndicator RF:2
/1.4C
#76
BoxIndicator RR:2
/1.5C
#76
BoxControls Connector:4
/1.6C
#76
BoxIndicator LF:2
/1.6C
#76
BoxIndicator LR:2
/1.7E
#76
MIC29201:3
/1.6C
#76
BoxHigo Harness Connector:3
5
4
3
2
1
5
4
3
2
1

X
X
X