NOTE: WIRING FOR 120V, 60Hz North American Standard

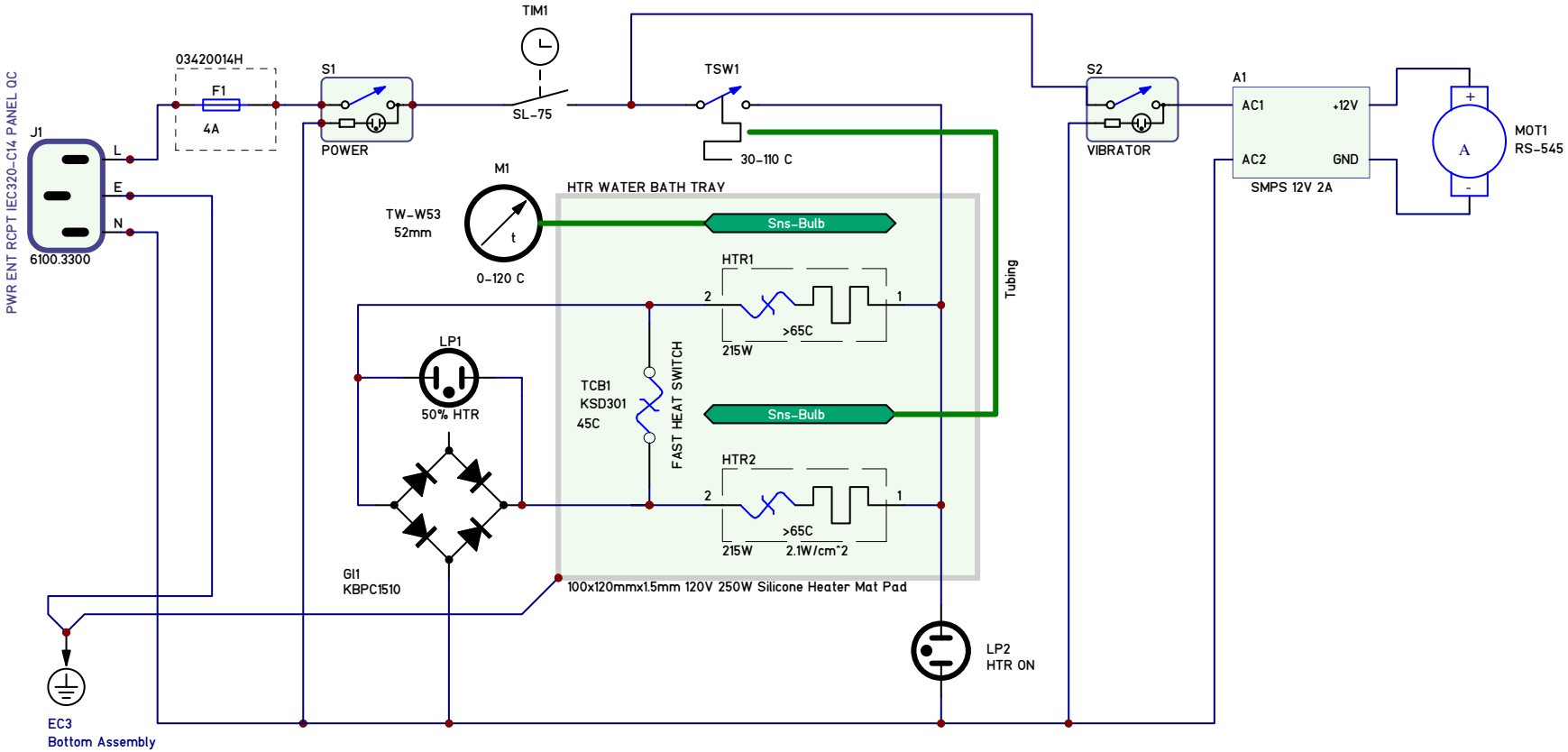

L:\01_GJO_PROJ\ACTIVE_PRJ\2016\16016_UV_Exposure_Unit\PCB_Design\UV_EXP_UNIT\UV_EXP_UNIT.Ddb - Etcher\Electrical\Etcher_V6_schematic.sch

Unless otherwise specified, all values are as follows:
resistor values are in Ohms, i.e. 0R47, 5R6, 220, 5K6, 22K
capacitor values are in Microfarads, i.e. 220p, 0u1, 2u2, 33
inductor values are in Microhenries, i.e. 0u22, 5u6, 68, 2m2

PCB Name: n/a
PCB Nr. n/a
PCB Type:

Title: Vibro Etch MK 2 Schematic

Used in | Repl.for | Build No.

This drawing is our property. Duplication, unauthorized use of any kind is prohibited.

Without Approval use only for inquiry.

Approval:

	Date	Name
Drawn		GJO
Modified	6-Aug-2024 06:23:13	
Checked		

☐ Prototype ☐ Production ☐ BOM Done?

Change Index	Change Notification Nr.	Date	Name

Scale:
Drw. Type:
Size: A
Rev: 0
Prj. Nr 16006
Drw. Nr 4410-0000
File: Etcher_V6_schematic.sch
Sheet 1 of 1

Requires TGL-017 Font