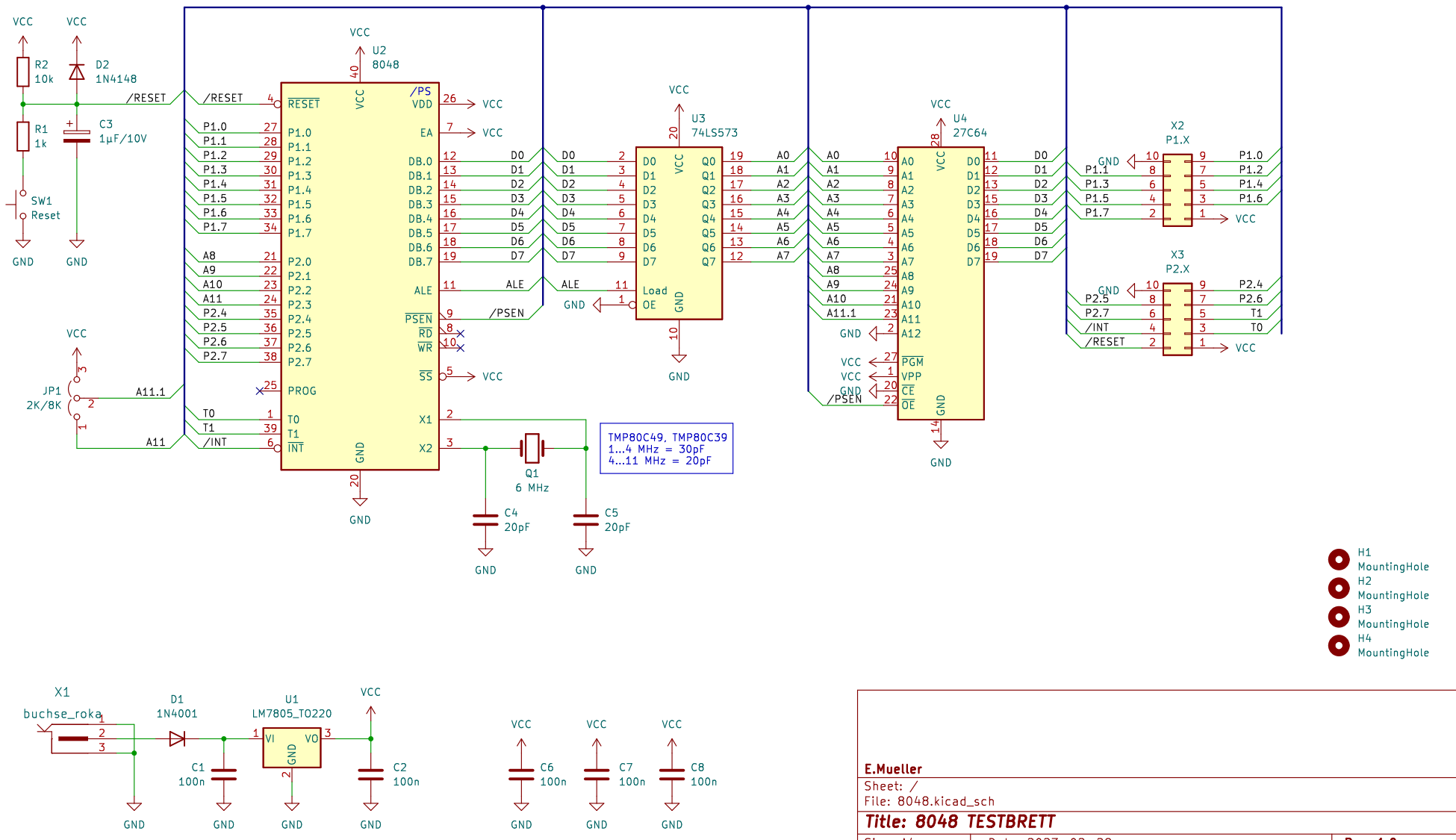

E.Mueller

Sheet: /

File: 8048.kicad_sch

Title: 8048 TESTBRETT

Size: A4	Date: 2023-02-28	**Rev: 1.0**
KiCad E.D.A. kicad 7.0.9		Id: 1/1