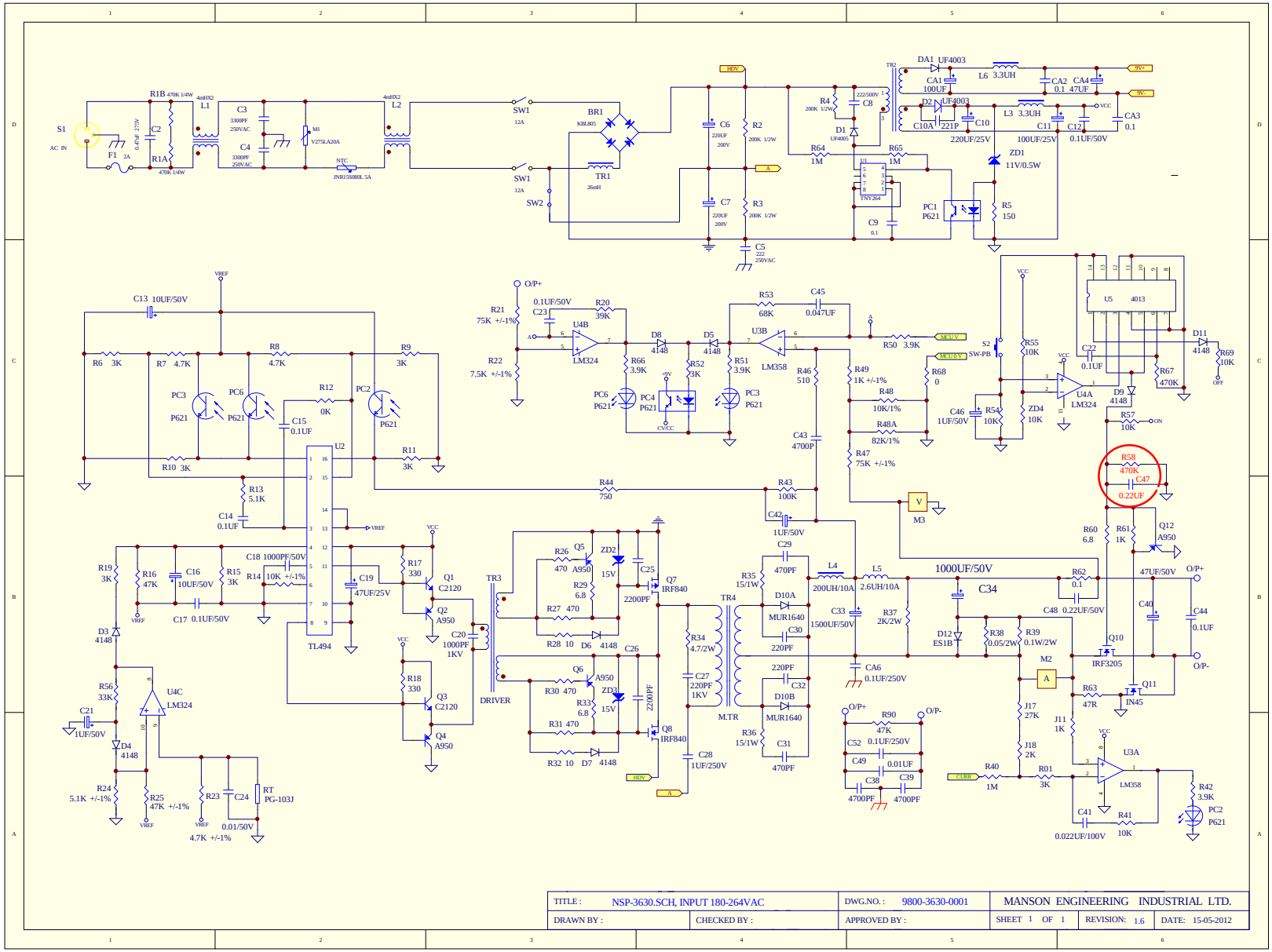

TITLE : NSP-3630.SCH, INPUT 180-264VAC		DWG.NO. : 9800-3630-0001	MANSON ENGINEERING INDUSTRIAL LTD.
DRAWN BY :	CHECKED BY :	APPROVED BY :	SHEET 1 OF 1 · REVISION: 1.6 · DATE: 15-05-2012