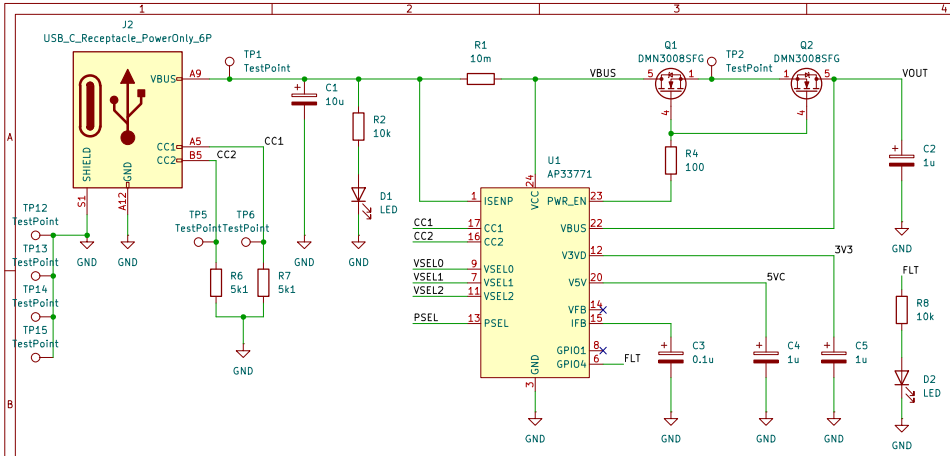

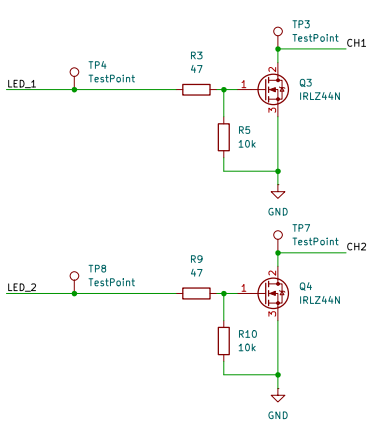

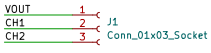

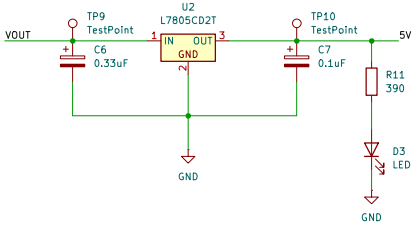

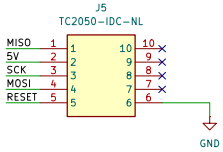

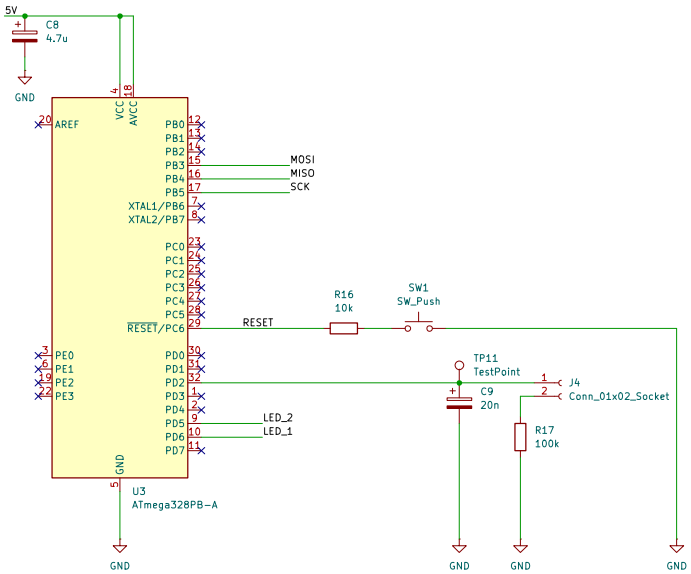

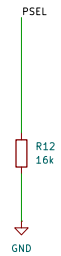

Power Capacity Selection

Value of R1	Power Capacity
6.8K	12W
16K	15W
27K	18W
36K	20W
45.3K	27W
56K	36W
64.9K	45W
75K	60W
82K	90W
91K	100W

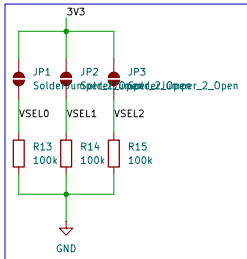

Voltage Selection

VSEL2	VSEL1	VSEL0	Target Voltage
0	0	0	5V
0	0	1	9V
0	1	0	15V
0	1	1	20V
1	0	0	4.3V
1	0	1	8.6V
1	1	0	12.9V
1	1	1	17.2V

Sheet: /
File: LampenSteuerungV2.kicad_sch

Title: LampenSteuerung

Size: A3	Date: 2024-11-22	Rev: 1
KiCad E.D.A. 8.0.6		Id: 1/1