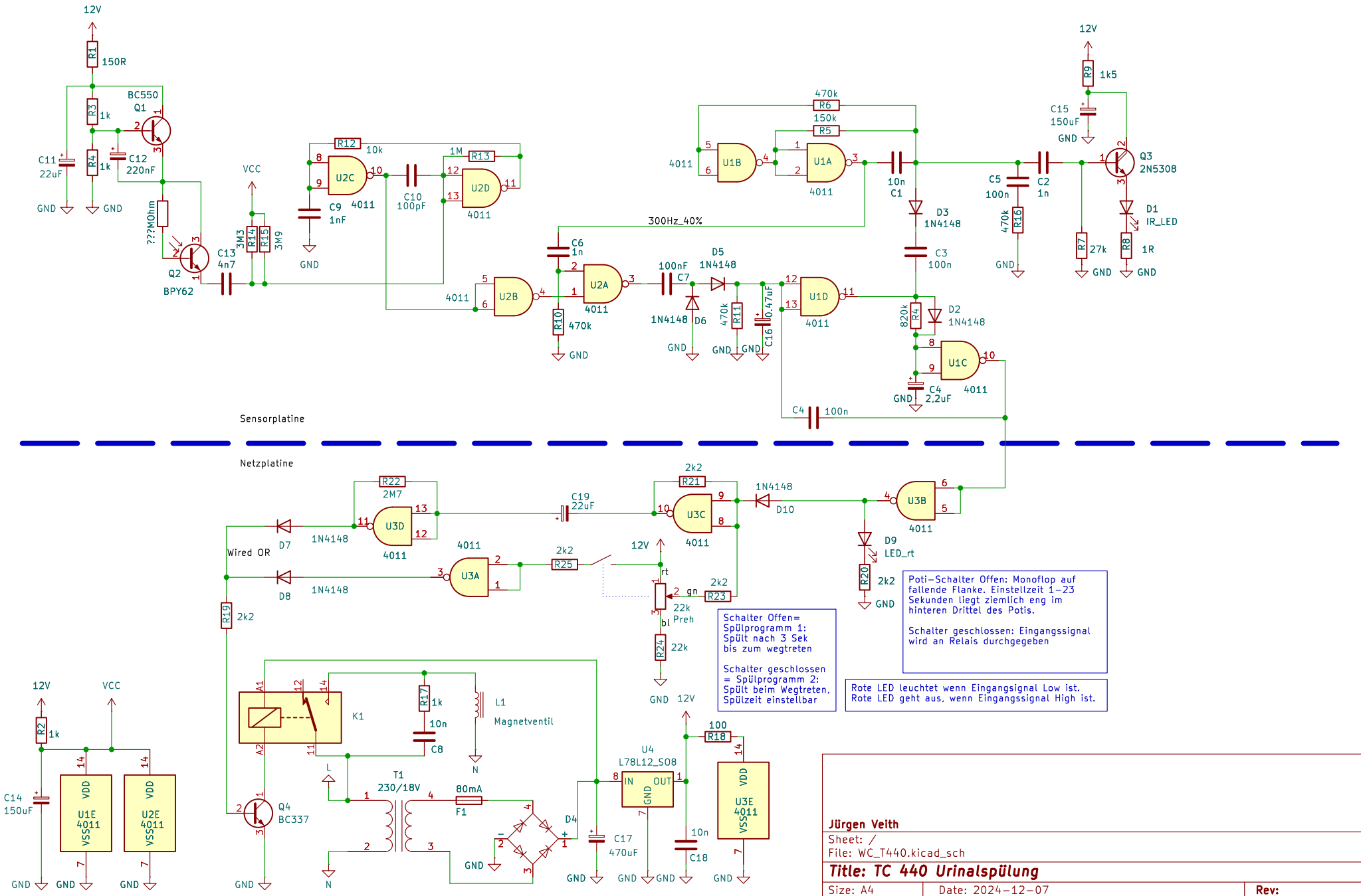

Jürgen Veith

Sheet: /

File: WC_T440.kicad_sch

Title: TC 440 Urinalspülung

Size: A4	Date: 2024-12-07	Rev:
KiCad E.D.A. 8.0.6		Id: 1/1