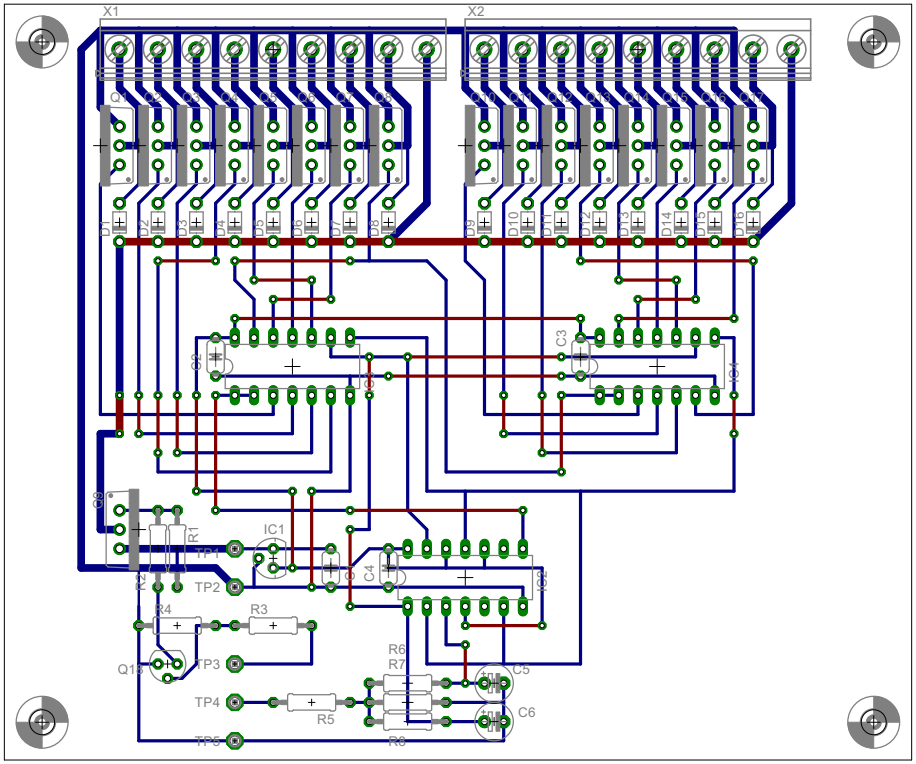

SPS_1_aus_16_Relaistreiber

23.01.2025 22:33:54