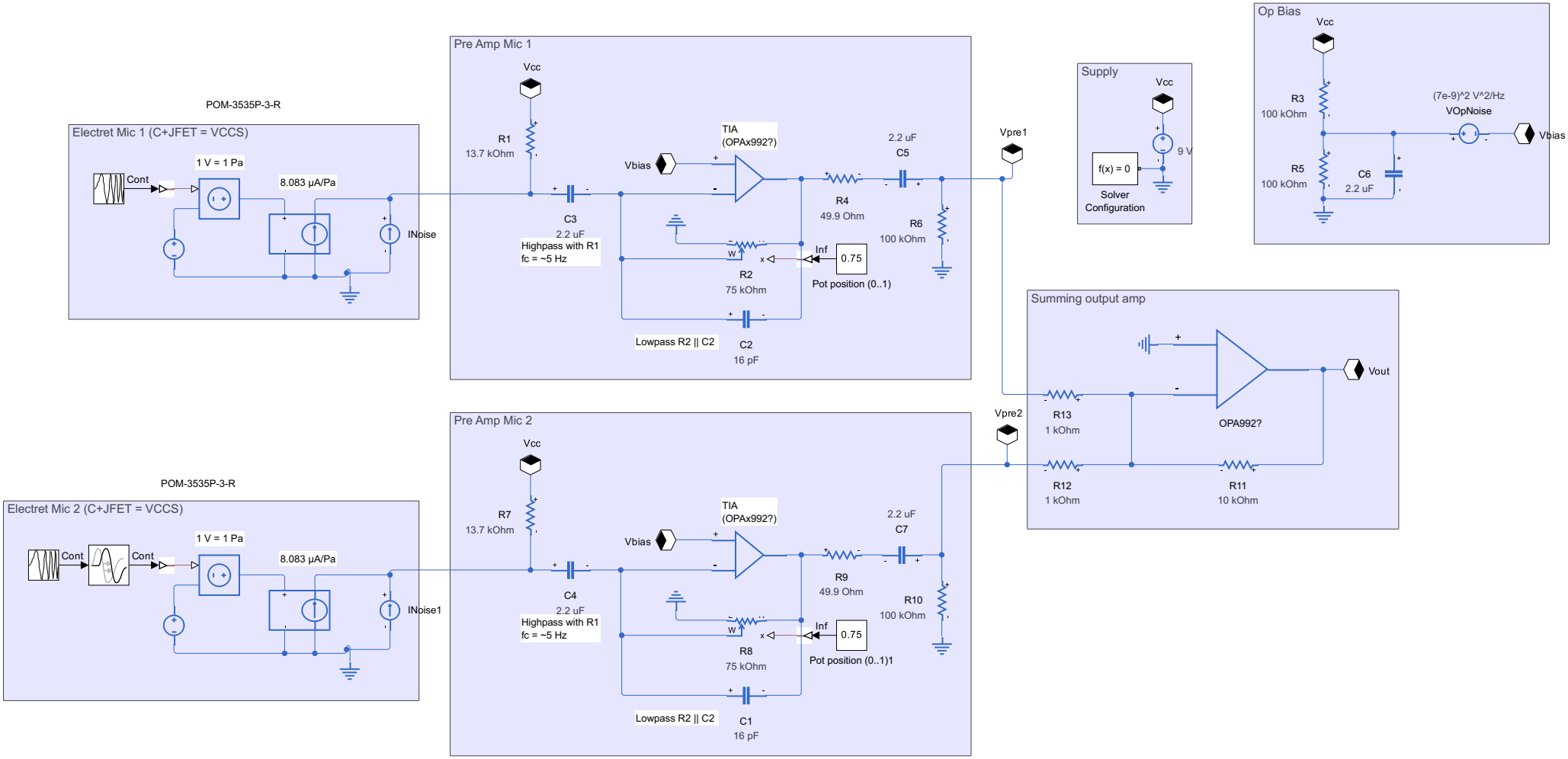
POM-3535P-3-R
Electret Mic 1 (C+JFET = VCCS)
Cont
1 V = 1 Pa
8.083 µA/Pa
INoise
Pre Amp Mic 1
Vcc
R1
13.7 kOhm
C3
2.2 uF
Highpass with R1
fc = ~5 Hz
Vbias
TIA
(OPAx992?)
R4
49.9 Ohm
2.2 uF
C5
R6
100 kOhm
R2
75 kOhm
Inf
0.75
Pot position (0..1)
Lowpass R2 || C2
C2
16 pF
Vpre1
Supply
Vcc
9 V
f(x) = 0
Solver
Configuration
Op Bias
Vcc
R3
100 kOhm
R5
100 kOhm
C6
2.2 uF
(7e-9)^2 V^2/Hz
VOpNoise
Vbias
Summing output amp
R13
1 kOhm
R12
1 kOhm
OPA992?
R11
10 kOhm
Vout
Vpre2
POM-3535P-3-R
Electret Mic 2 (C+JFET = VCCS)
Cont
Cont
1 V = 1 Pa
8.083 µA/Pa
INoise1
Pre Amp Mic 2
Vcc
R7
13.7 kOhm
C4
2.2 uF
Highpass with R1
fc = ~5 Hz
Vbias
TIA
(OPAx992?)
R9
49.9 Ohm
2.2 uF
C7
R10
100 kOhm
R8
75 kOhm
Inf
0.75
Pot position (0..1)1
Lowpass R2 || C2
C1
16 pF