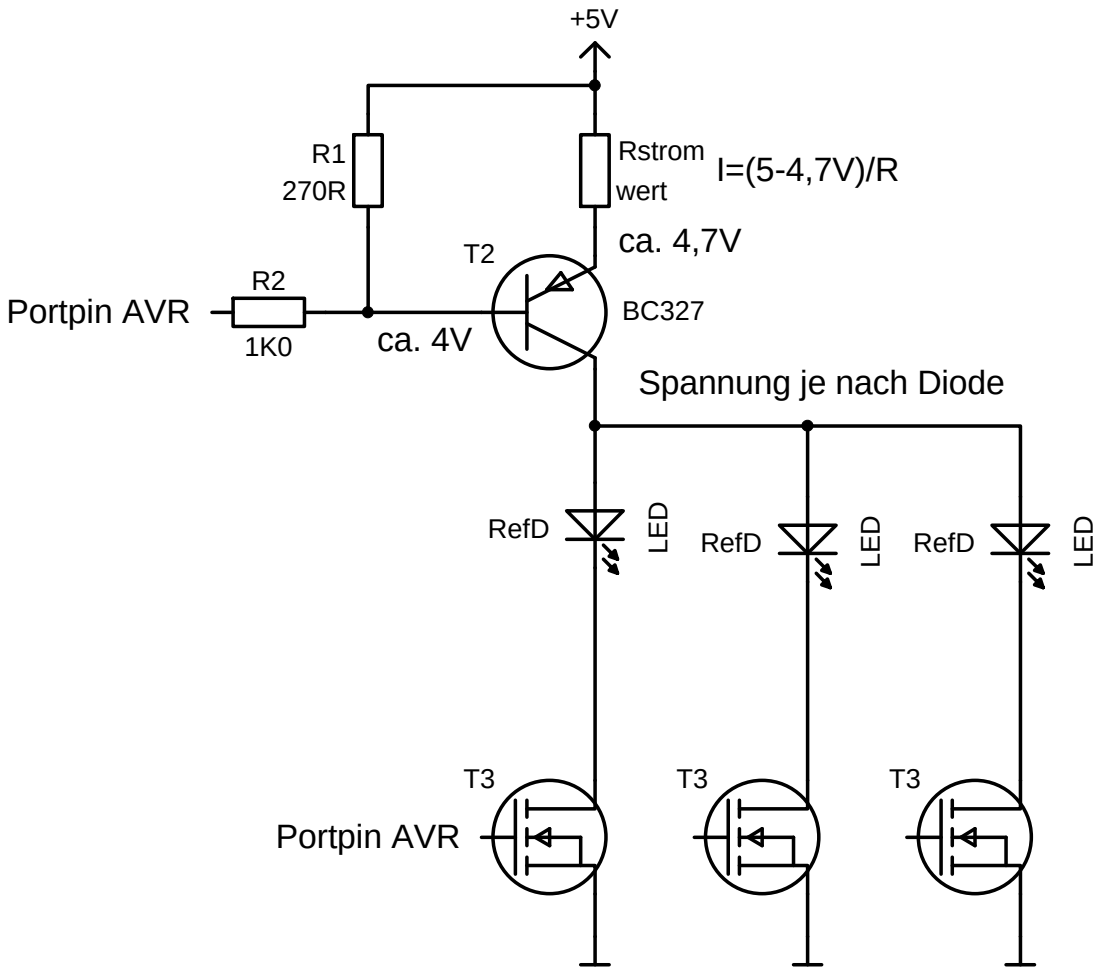
+5V
R1
270R
Rstrom
wert
I=(5-4,7V)/R
ca. 4,7V
T2
R2
Portpin AVR
1K0
ca. 4V
BC327
Spannung je nach Diode
RefD
LED
RefD
LED
RefD
LED
T3
T3
T3
Portpin AVR