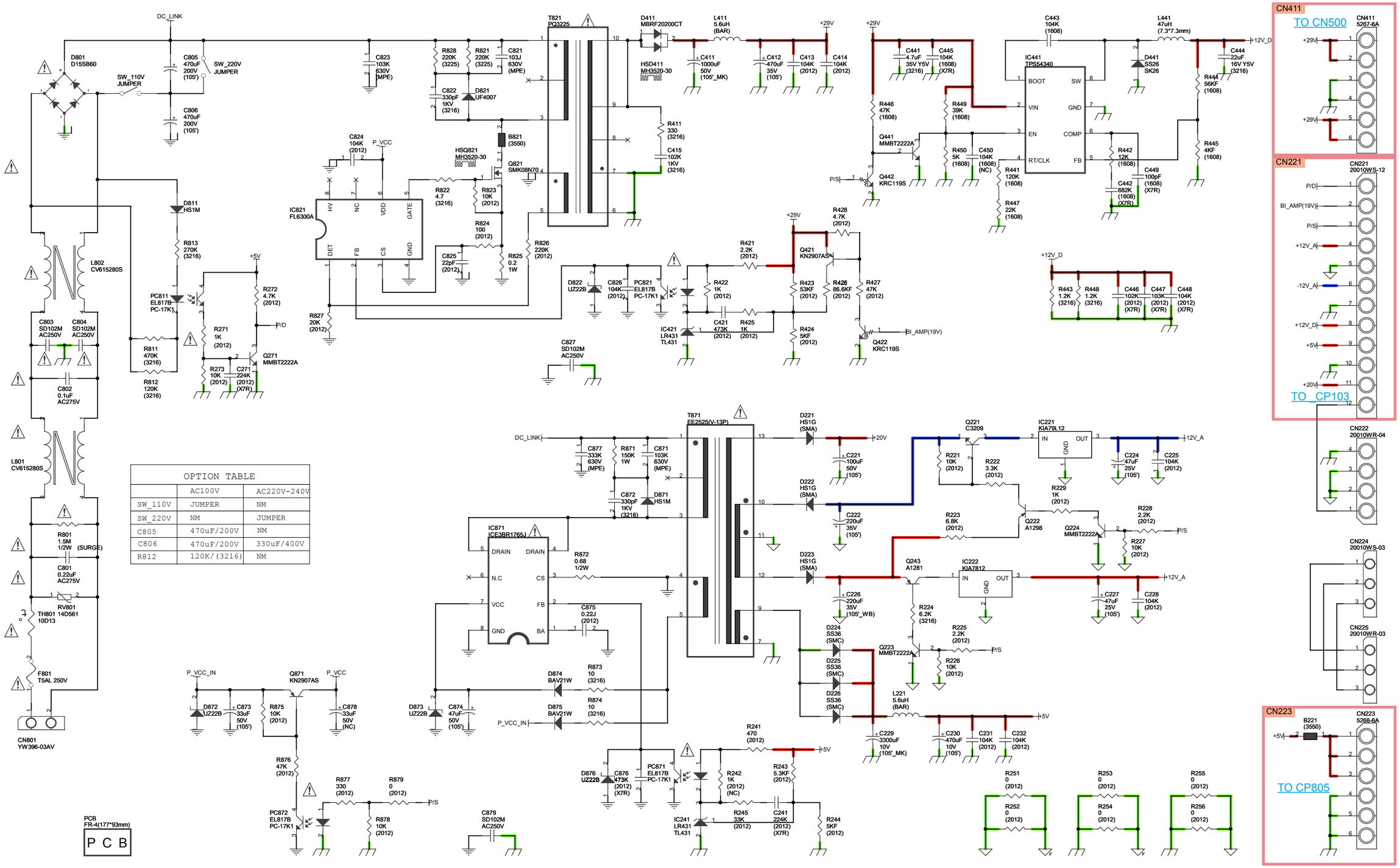

OPTION TABLE		
	AC100V	AC220V-240V
SW_110V	JUMPER	NM
SW_220V	NM	JUMPER
C805	470uF/200V	NM
C806	470uF/200V	330uF/400V
R812	120K/(3216)	NM

⚠ : To reduce the risk of electric shock,leakage current or resistance measurement shall be carried out before the appliance returned to the customer

GND LINE | POWER+ LINE | POWER- LINE | AUDIO SIGNAL | TMDS SIGNAL | ANALOG VIDEO | DIGITAL VIDEO

SCHEMATIC DIAGRAMS (10/10)
SCH10_SMPS