Last Saved:	02.08.2025 16:15:20
Design Name:	20250620-0500-00
Description:	TPA3255
Page:	Power 1

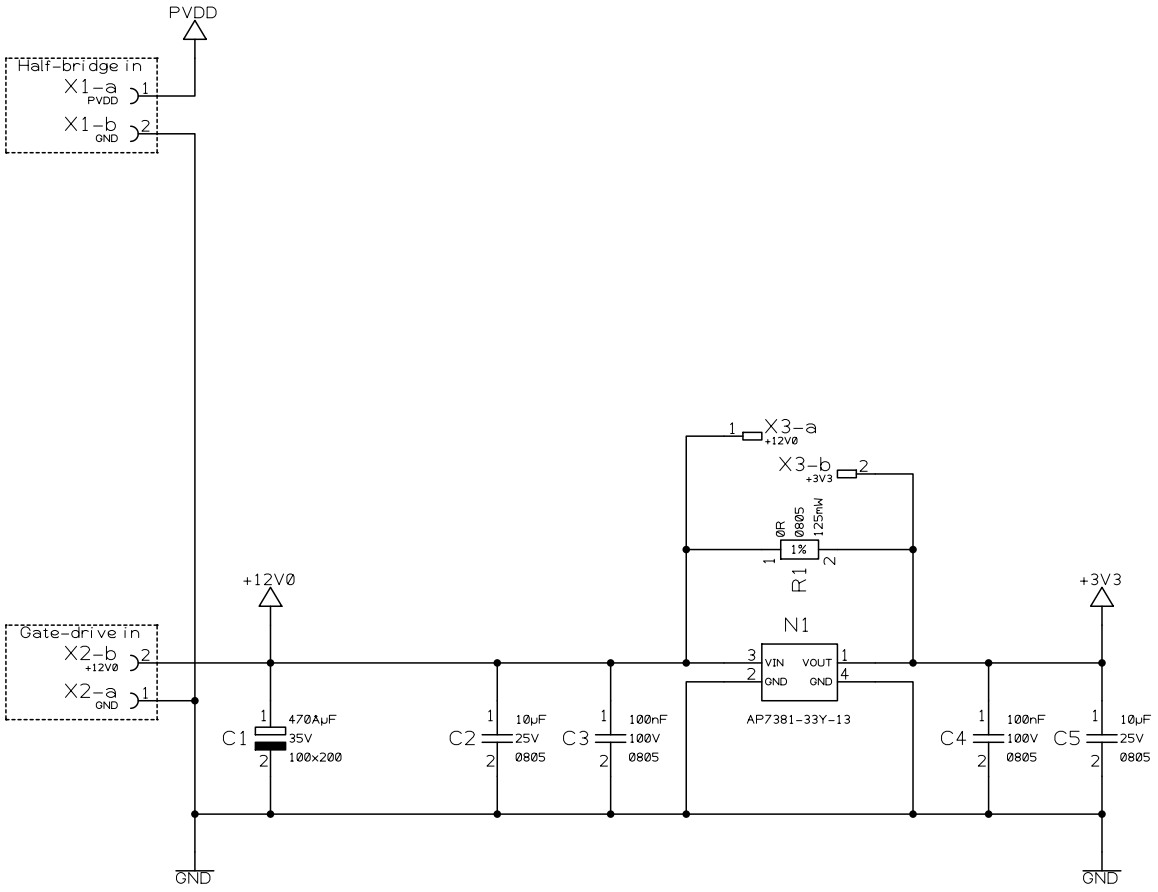

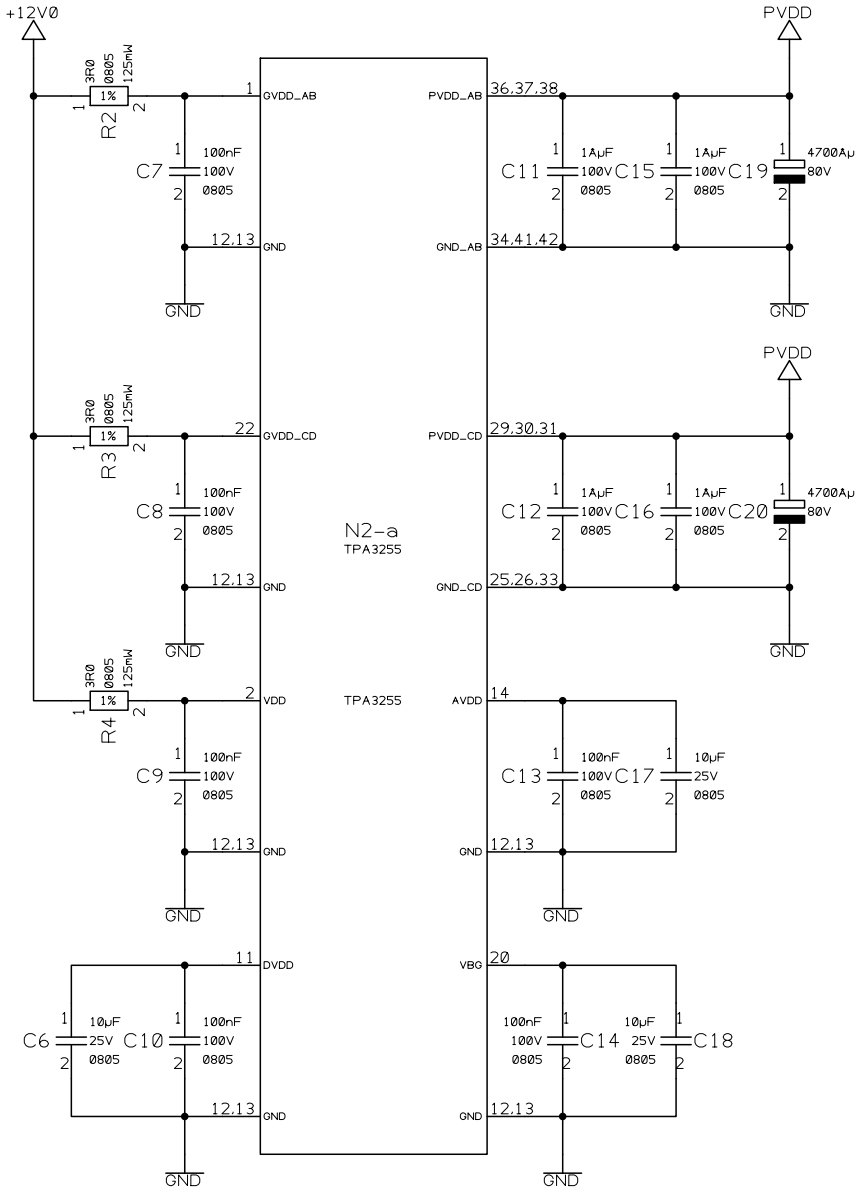

Last Saved:	02.08.2025 16:15:20
Design Name:	20250620-0500-00
Description:	TPA3255
Page:	Audio in AB 2

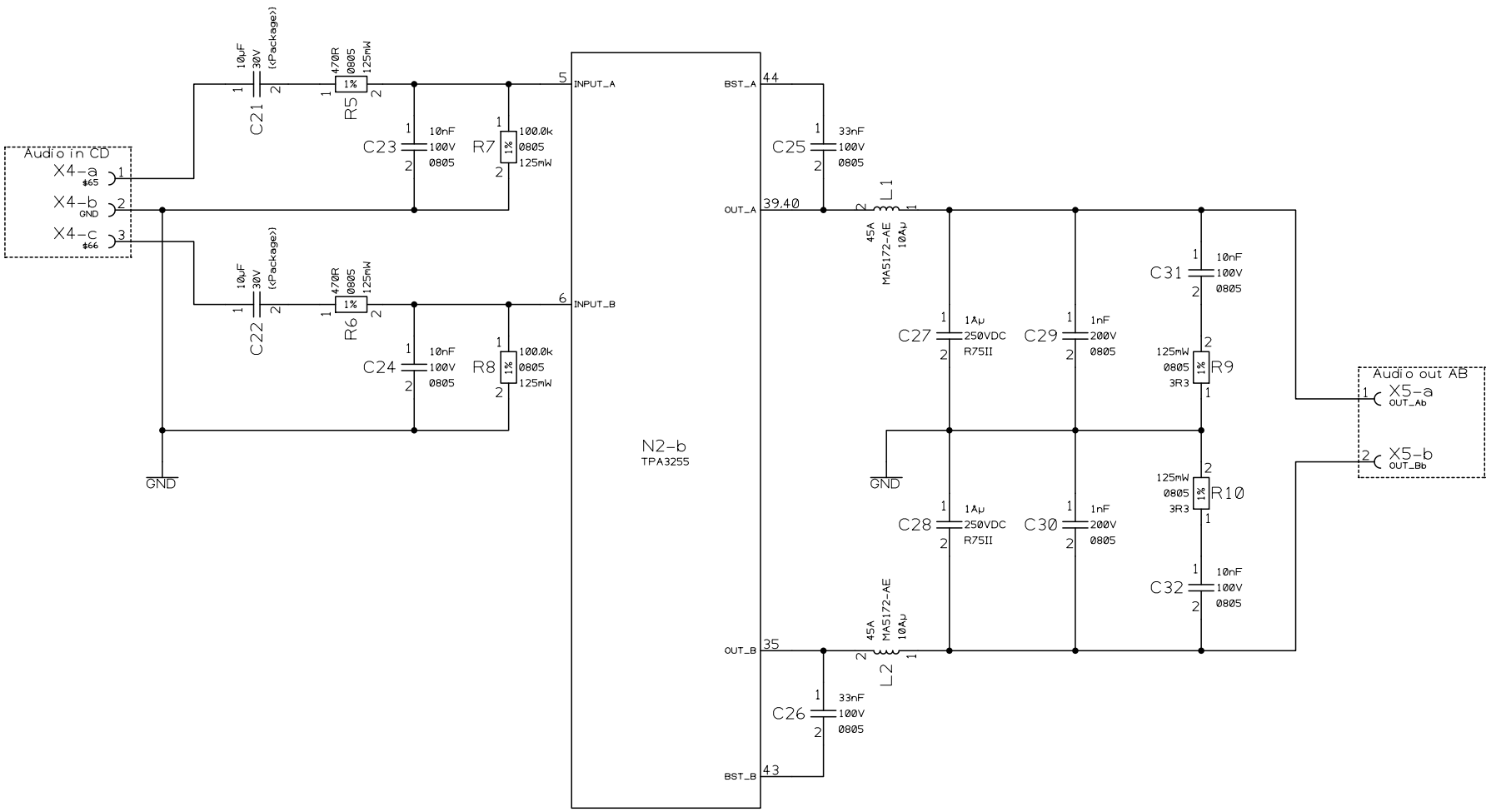

Last Saved:	02.08.2025 16:15:20
Design Name:	20250620-0500-00
Description:	TPA3255
Page:	Audio in CD 3

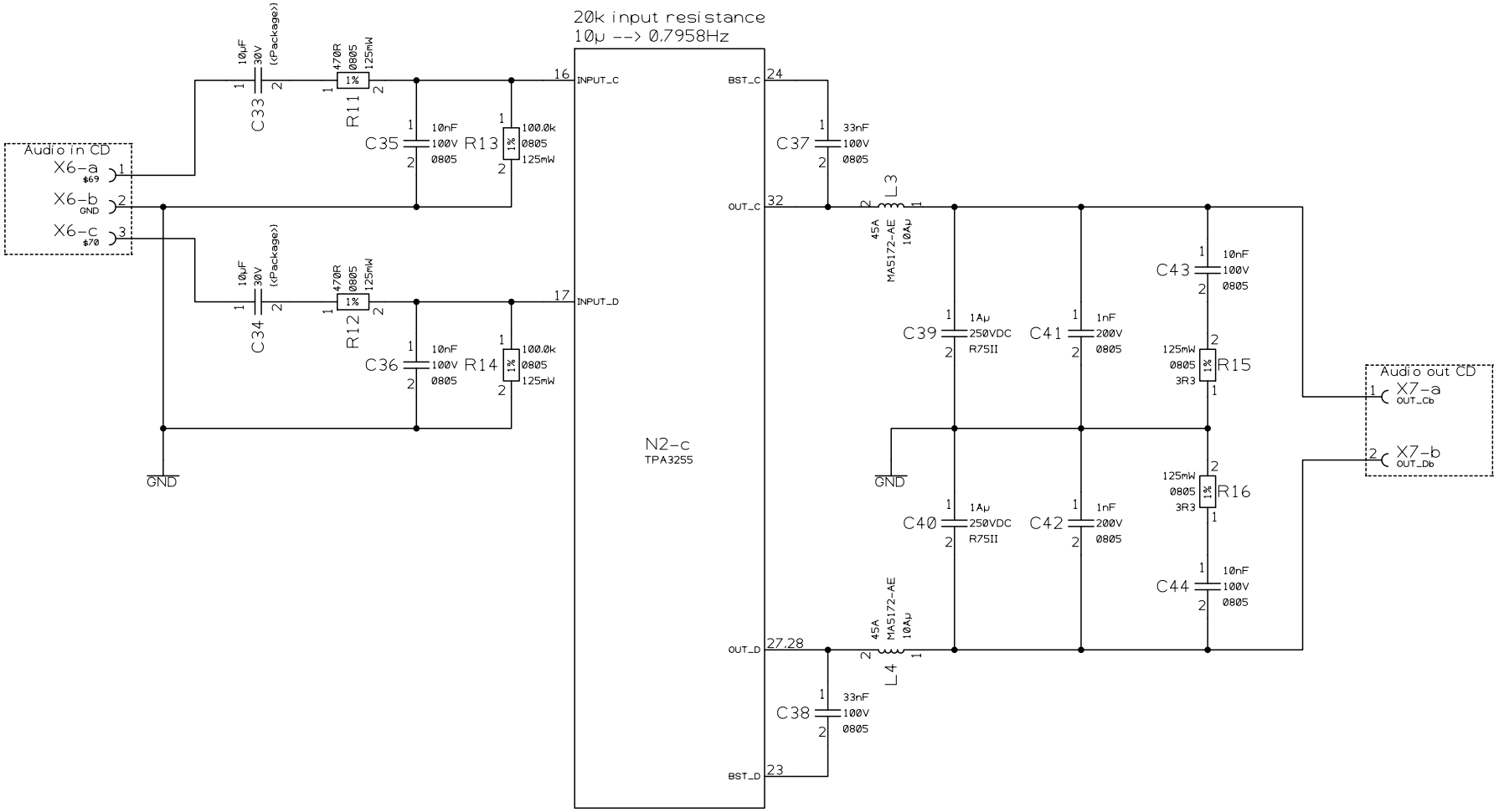

Last Saved:	02.08.2025 16:15:20
Design Name:	20250620-0500-00
Description:	TPA3255
Page:	Setting 4

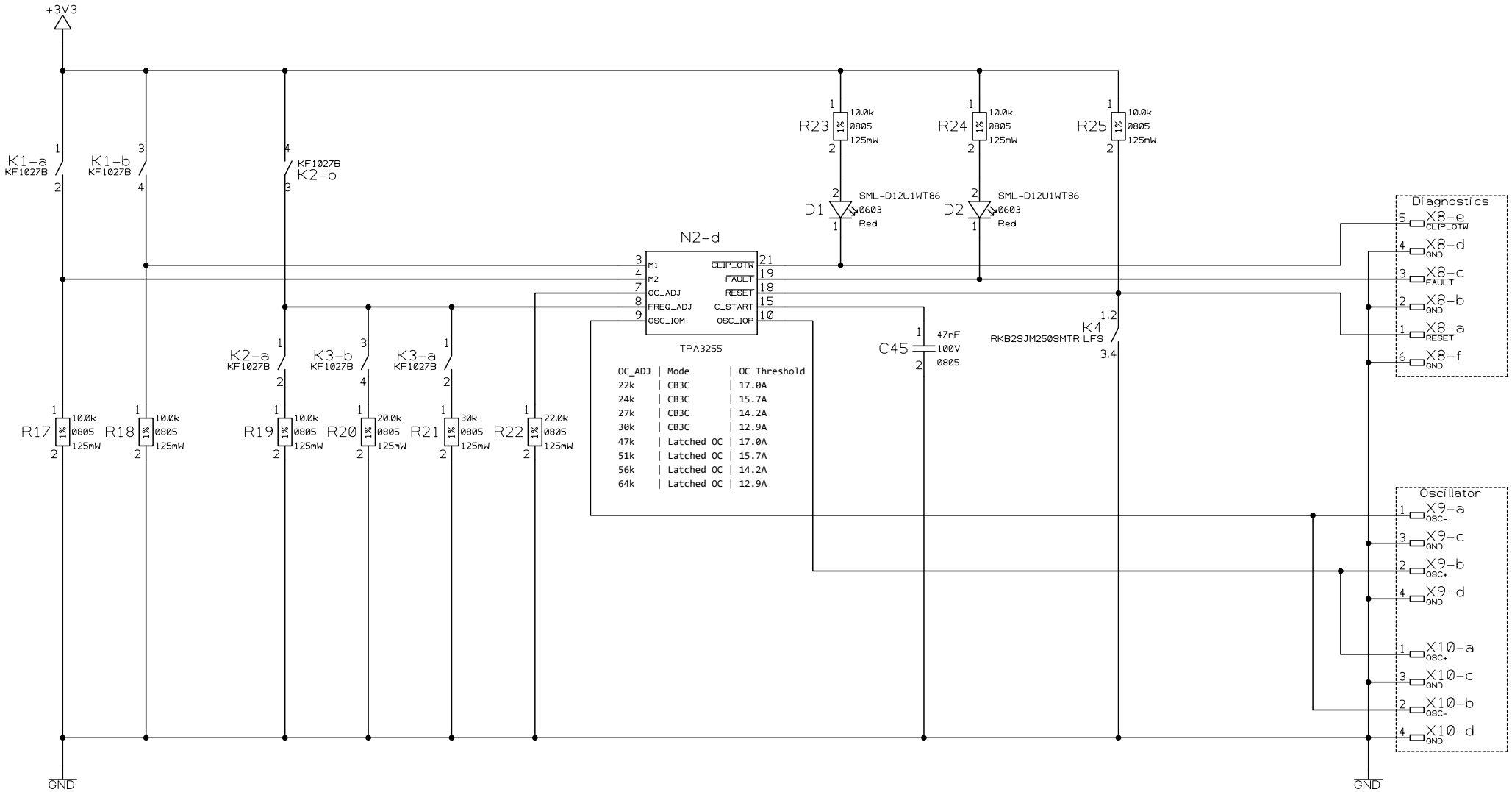

OC_ADJ	Mode	OC Threshold
22k	CB3C	17.0A
24k	CB3C	15.7A
27k	CB3C	14.2A
30k	CB3C	12.9A
47k	Latched OC	17.0A
51k	Latched OC	15.7A
56k	Latched OC	14.2A
64k	Latched OC	12.9A