# Resistive Type humidity Sensor

【Humidity Sensor】

Model No. HIS-06K-N

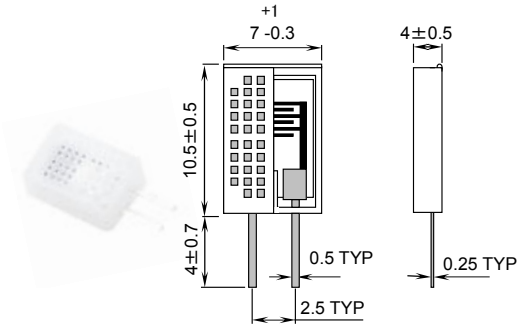


Model No. HIS-08

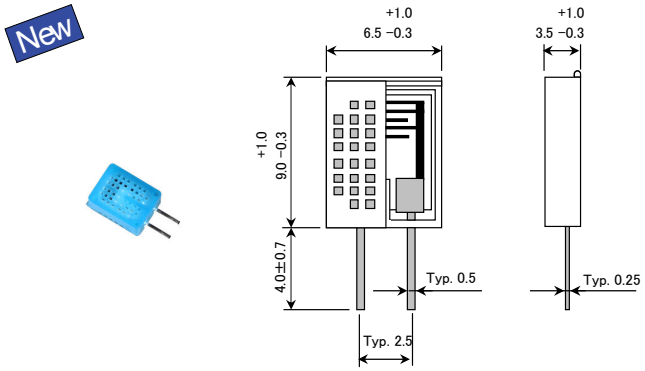


Unit : mm

| Item | | HIS-06K-N | HIS-08 |
|---|---|---|---|
| Absolute Maximum Ratings | Rated Voltage | AC 5.5V Max. | |
| | Rated Wattage | 1.0mW | |
| | Storage Temerature Range | -25℃～70℃ | |
| Operating Range | Operating Temperature Range | -20℃～60℃ | |
| | Operating Humidity Range | 0%RH～90%RH | |
| Electrical Characteristics | Output | 45.8kΩ(at:25℃/50%RH) | 57.0kΩ(at:25℃/50%RH) |
| | Output Accuracy | ±5%RH(at.25℃/50%RH) | |
| | Hysteresis | ±1%RH(at.30～90%RH) | |
| | Response | 3.5minutes(at.30%RH⇔90%RH, 9%Reach, 1.2cm/sec) | |

【Humidity Sensor Module】

Model No. HSU-07 Series

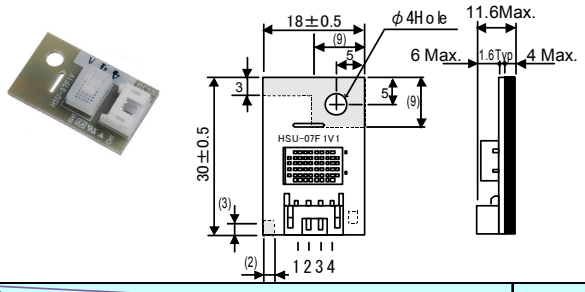


Model No. HSU-08 Series

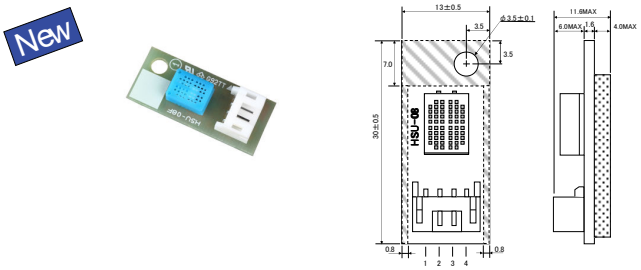


| Item | | HSU-07A1 | HSU-08F9C1 | HSU-08F9B2 |
|---|---|---|---|---|
| Absolute Maximum Ratings | Rated Voltage | DC 5.0V(4.75～5.25V) | | DC 3.3V(3.135～3.465V) |
| | Storage Humidity, Temperature Range | 0%RH～90%RH / -25℃～70℃ | | |
| Operating Range | Operating TemperatureRange | -20℃～60℃ | | |
| | Operating Humidity Range | 20%RH～90%RH | 10%RH～90%RH | |
| Electrical Characteristics | Output | 2.220V (at.25℃/60%RH) | 1.386V (at.25℃/60%RH) | 1.550V (at.25℃/60%RH) |
| | Output Accuracy | ±5%RH (at.25℃/40%RH・60%RH) | | |
| | Current Consumption | 2.0mA Typ. | | |
| | Hysteresis | ±1%RH(at.30%RH～90%RH) | | |
| | Thermistor Characteristics | R25=47kΩ±5% B25/50=4050±1% | R25=10kΩ±3% B25/50=3900±3% | |
| | Response | 3.5minutes (at.30%RH⇔90%RH, 90% Reach, 1.2cm/sec) | | |



* Specifications are subject to change without notice.