Voltage regulation

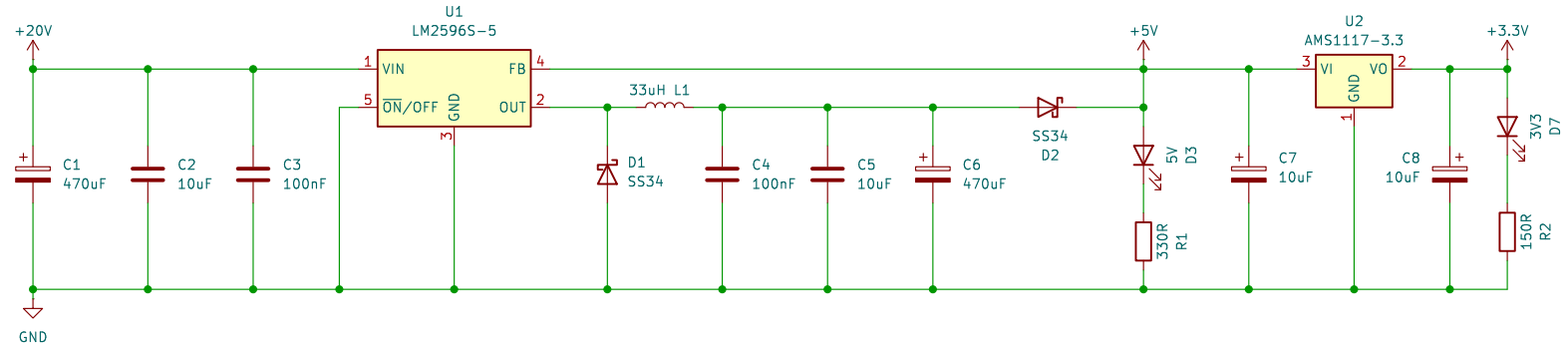

PD-controller

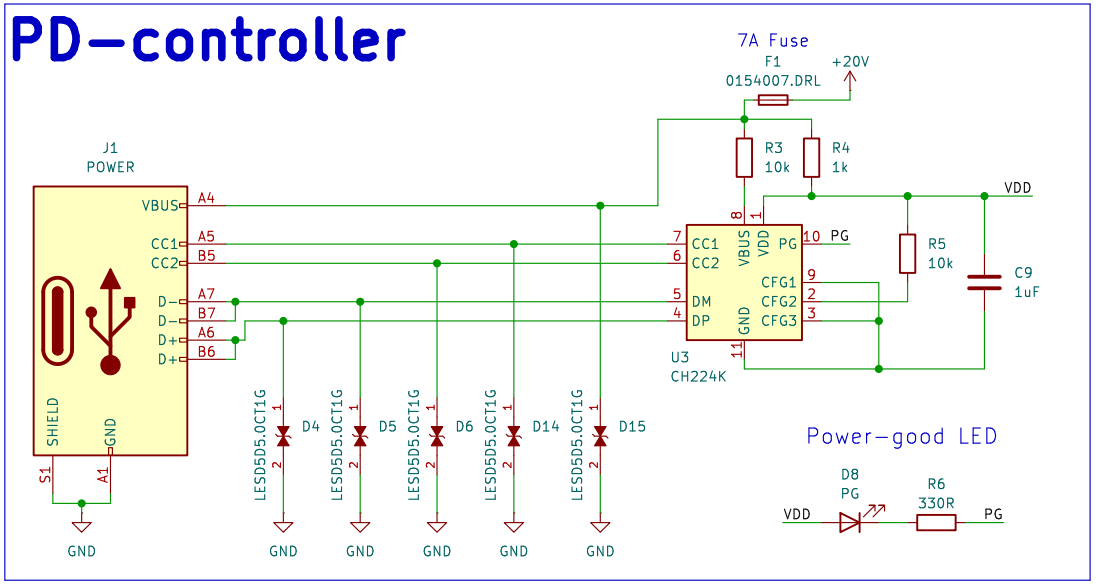

Voltage Rails

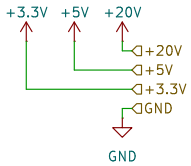

Power-PD chip for setting up 20V from USB-C, Step-down to 5V, LDO to 3.3V

Thomas Österreicher

Sheet: /Power/
File: Power.kicad_sch

Title: Power

Size: A4	Date: 2025-05-22	**Rev:**
KiCad E.D.A. 9.0.2		Id: 2/6