# Voltage regulation

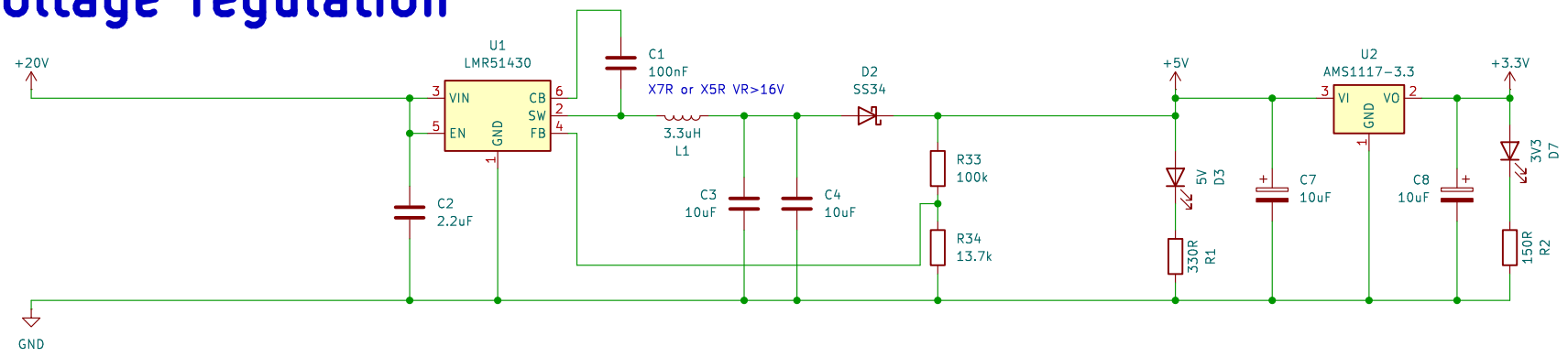


**Table 9-1. L and $C_{OUT}$ Typical Values**

| $f_{SW}$ (kHz) | $V_{OUT}$ (V) | L (µH) | $C_{OUT}$ (µF) [1] | $R_{FBT}$ (kΩ) | $R_{FBB}$ (kΩ) |
|---|---|---|---|---|---|
| 500 | 3.3 | 5.6 | 2 × 22 µF / 25 V | 100 | 22.1 |
| | 5 | 6.8 | 2 × 22 µF / 25 V | 100 | 13.7 |
| | 12 | 12 | 3 × 22 µF / 25 V | 100 | 5.23 |

**Table 9-2. L and $C_{OUT}$ Typical Values**

| $f_{SW}$ (kHz) | $V_{OUT}$ (V) | L (µH) | $C_{OUT}$ (µF) [1] | $R_{FBT}$ (kΩ) | $R_{FBB}$ (kΩ) |
|---|---|---|---|---|---|
| 1100 | 3.3 | 2.2 | 2 × 10 µF / 25 V | 100 | 22.1 |
| | 5 | 3.3 | 2 × 10 µF / 25 V | 100 | 13.7 |
| | 12 | 6.8 | 3 × 10 µF / 25 V | 100 | 5.23 |

# PD-controller

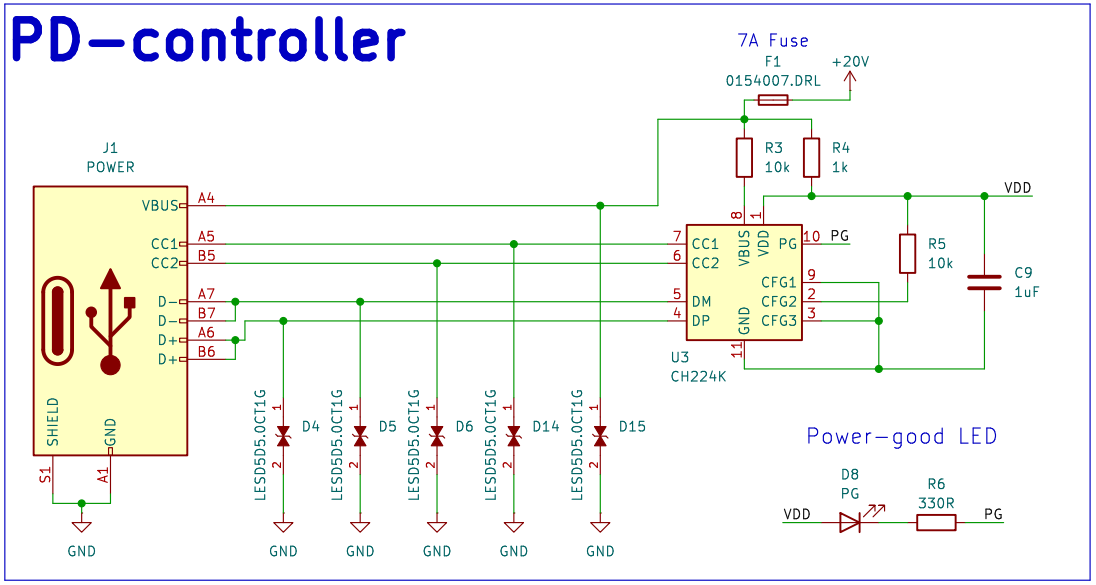


# Voltage Rails

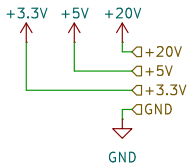


Power-PD chip for setting up 20V from USB-C, Step-down to 5V, LDO to 3.3V

**Thomas Österreicher**

Sheet: /Power/
File: Power.kicad_sch

**Title: Power**

| Size: A4 | Date: 2025-05-22 | Rev: |
|---|---|---|
| KiCad E.D.A. 9.0.2 | | Id: 2/6 |