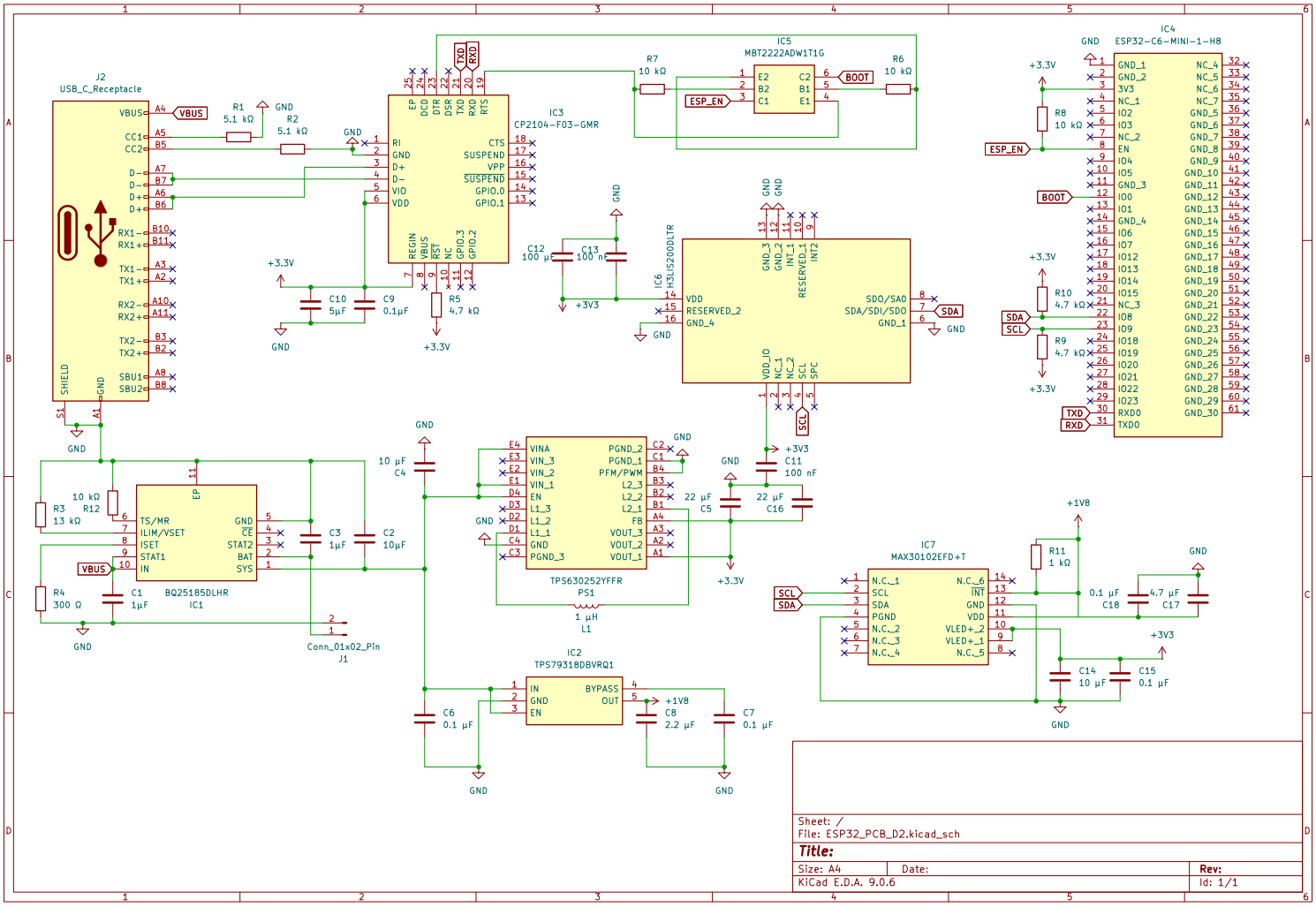
J2
USB_C_Receptacle
IC3
CP2104-F03-GMR
IC5
MBT2222ADW1T1G
IC4
ESP32-C6-MINI-1-H8
IC6
H3LIS200DLTR
IC1
BQ25185DLHR
IC2
TPS79318DBVRQ1
PS1
TPS630252YFFR
L1
IC7
MAX30102EFD+T
J1
Conn_01x02_Pin
VBUS
BOOT
ESP_EN
SDA
SCL
TXD
RXD
GND
+3.3V
+3V3
+1V8
R1 5.1 kΩ
R2 5.1 kΩ
R3 13 kΩ
R4 300 Ω
R5 4.7 kΩ
R6 10 kΩ
R7 10 kΩ
R8 10 kΩ
R9 4.7 kΩ
R10 4.7 kΩ
R11 1 kΩ
R12 10 kΩ
C1 1µF
C2 10µF
C3 1µF
C4 10 µF
C5 22 µF
C6 0.1 µF
C7 0.1 µF
C8 2.2 µF
C9 0.1µF
C10 5µF
C11 100 nF
C12 100 µF
C13 100 nF
C14 10 µF
C15 0.1 µF
C16 22 µF
C17 4.7 µF
C18 0.1 µF
Sheet: /
File: ESP32_PCB_D2.kicad_sch
Title:
Size: A4
Date:
Rev:
KiCad E.D.A. 9.0.6
Id: 1/1