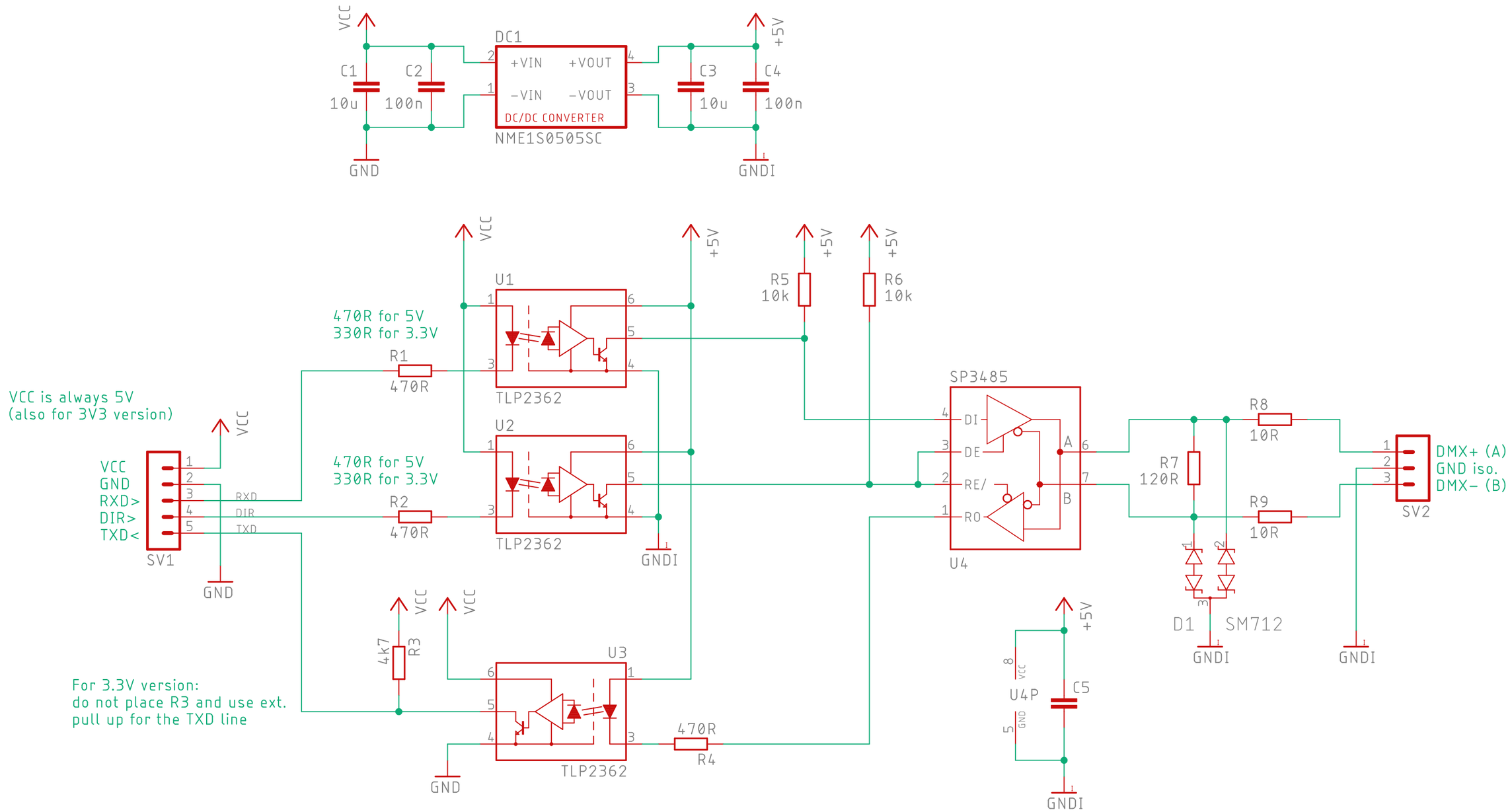

© Sebastian Rietig

https://github.com/SebiR/

Isolated_DMX_Module

13.12.2025 18:08

Sheet: 1/1