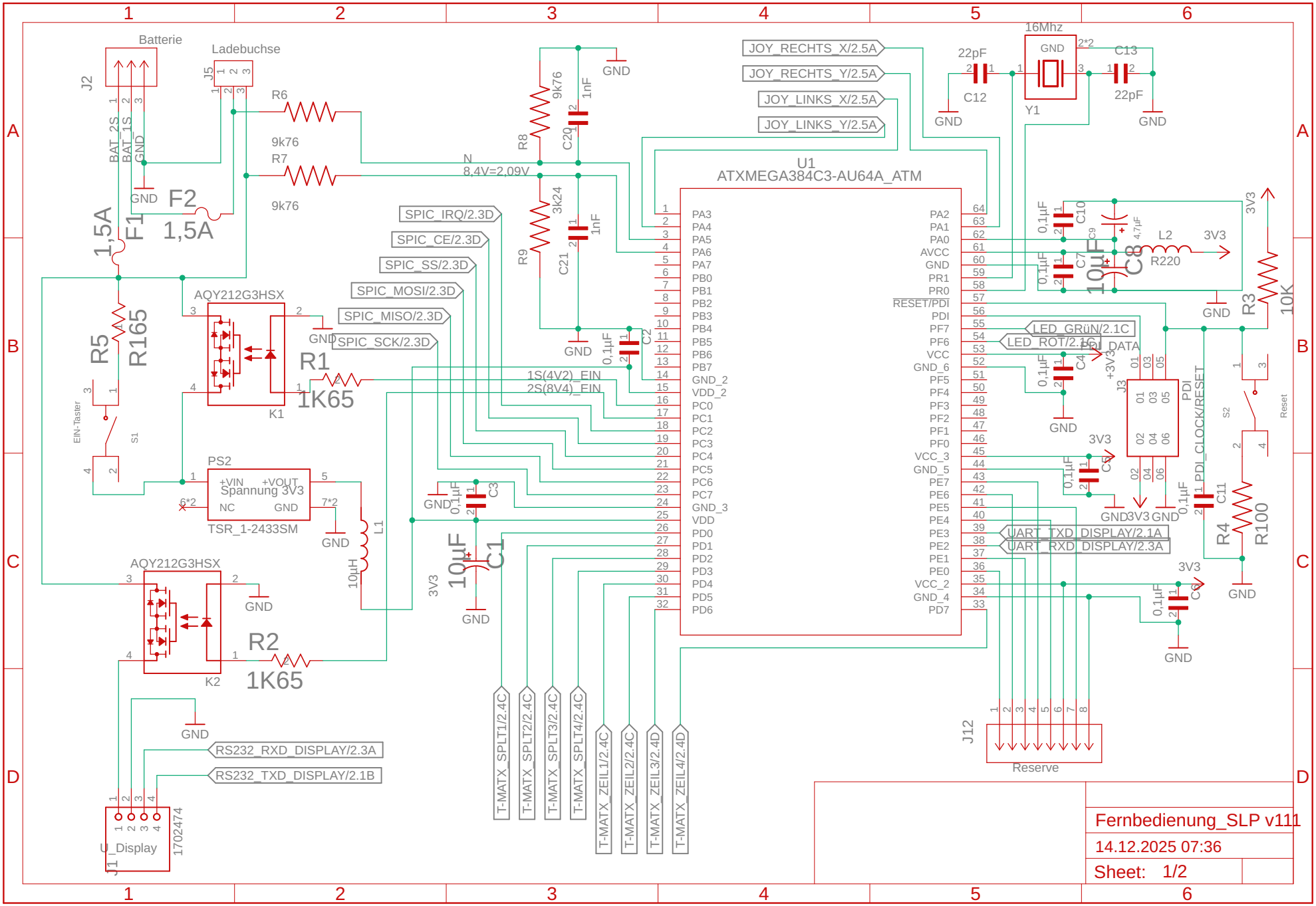
Batterie
J2
BAT_2S
BAT_1S
GND
Ladebuchse
J5
R6
9k76
R7
9k76
F2
1,5A
F1
1,5A
N
8,4V=2,09V
R8
9k76
C20
1nF
R9
3k24
C21
1nF
GND
JOY_RECHTS_X/2.5A
JOY_RECHTS_Y/2.5A
JOY_LINKS_X/2.5A
JOY_LINKS_Y/2.5A
16Mhz
Y1
22pF
C12
C13
22pF
U1
ATXMEGA384C3-AU64A_ATM
SPIC_IRQ/2.3D
SPIC_CE/2.3D
SPIC_SS/2.3D
SPIC_MOSI/2.3D
SPIC_MISO/2.3D
SPIC_SCK/2.3D
AQY212G3HSX
K1
R5
R165
R1
1K65
EIN-Taster
S1
1S(4V2)_EIN
2S(8V4)_EIN
PS2
Spannung 3V3
+VIN
+VOUT
NC
GND
TSR_1-2433SM
L1
10µH
C3
0,1µF
C1
10µF
3V3
AQY212G3HSX
K2
R2
1K65
RS232_RXD_DISPLAY/2.3A
RS232_TXD_DISPLAY/2.1B
J11
U_Display
1702474
T-MATX_SPLT1/2.4C
T-MATX_SPLT2/2.4C
T-MATX_SPLT3/2.4C
T-MATX_SPLT4/2.4C
T-MATX_ZEIL1/2.4C
T-MATX_ZEIL2/2.4C
T-MATX_ZEIL3/2.4D
T-MATX_ZEIL4/2.4D
C2
C10
C9
4,7µF
C7
C8
10µF
L2
R220
R3
10K
LED_GRüN/2.1C
LED_ROT/2.1C
PDI_DATA
+3V3
C4
J3
PDI
PDI_CLOCK/RESET
C5
C11
R4
R100
S2
Reset
UART_TXD_DISPLAY/2.1A
UART_RXD_DISPLAY/2.3A
C6
J12
Reserve
Fernbedienung_SLP v111
14.12.2025 07:36
Sheet: 1/2