HEATHKIT 5" OSCILLOSCOPE

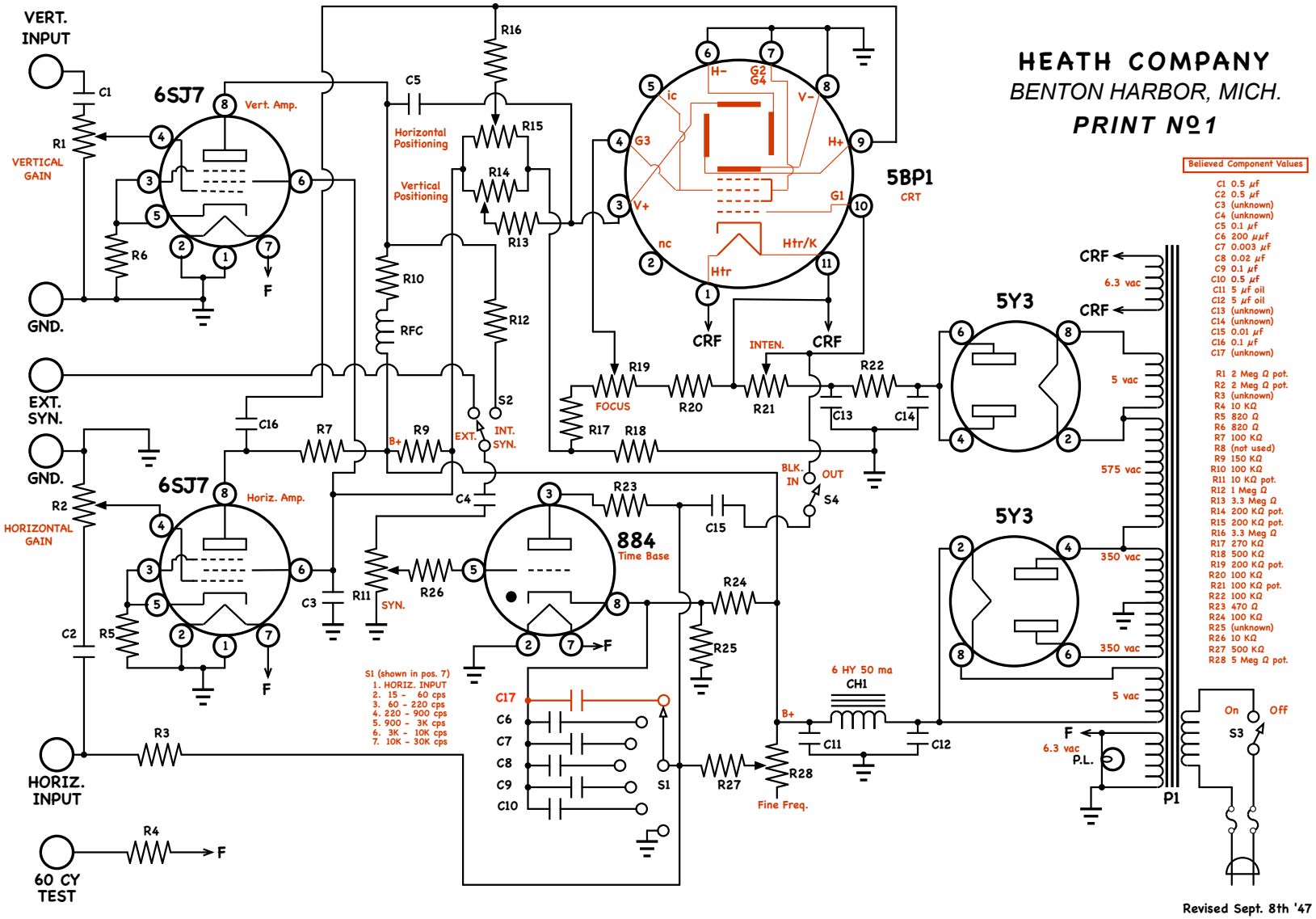

HEATH COMPANY

BENTON HARBOR, MICH.

PRINT Nº 1

Believed Component Values

C1	0.5 µf
C2	0.5 µf
C3	(unknown)
C4	(unknown)
C5	0.1 µf
C6	200 µµf
C7	0.003 µf
C8	0.02 µf
C9	0.1 µf
C10	0.5 µf
C11	5 µf oil
C12	5 µf oil
C13	(unknown)
C14	(unknown)
C15	0.01 µf
C16	0.1 µf
C17	(unknown)
R1	2 Meg Ω pot.
R2	2 Meg Ω pot.
R3	(unknown)
R4	10 KΩ
R5	820 Ω
R6	820 Ω
R7	100 KΩ
R8	(not used)
R9	150 KΩ
R10	100 KΩ
R11	10 KΩ pot.
R12	1 Meg Ω
R13	3.3 Meg Ω
R14	200 KΩ pot.
R15	200 KΩ pot.
R16	3.3 Meg Ω
R17	270 KΩ
R18	500 KΩ
R19	200 KΩ pot.
R20	100 KΩ
R21	100 KΩ pot.
R22	100 KΩ
R23	470 Ω
R24	100 KΩ
R25	(unknown)
R26	10 KΩ
R27	500 KΩ
R28	5 Meg Ω pot.

Revised Sept. 8th '47