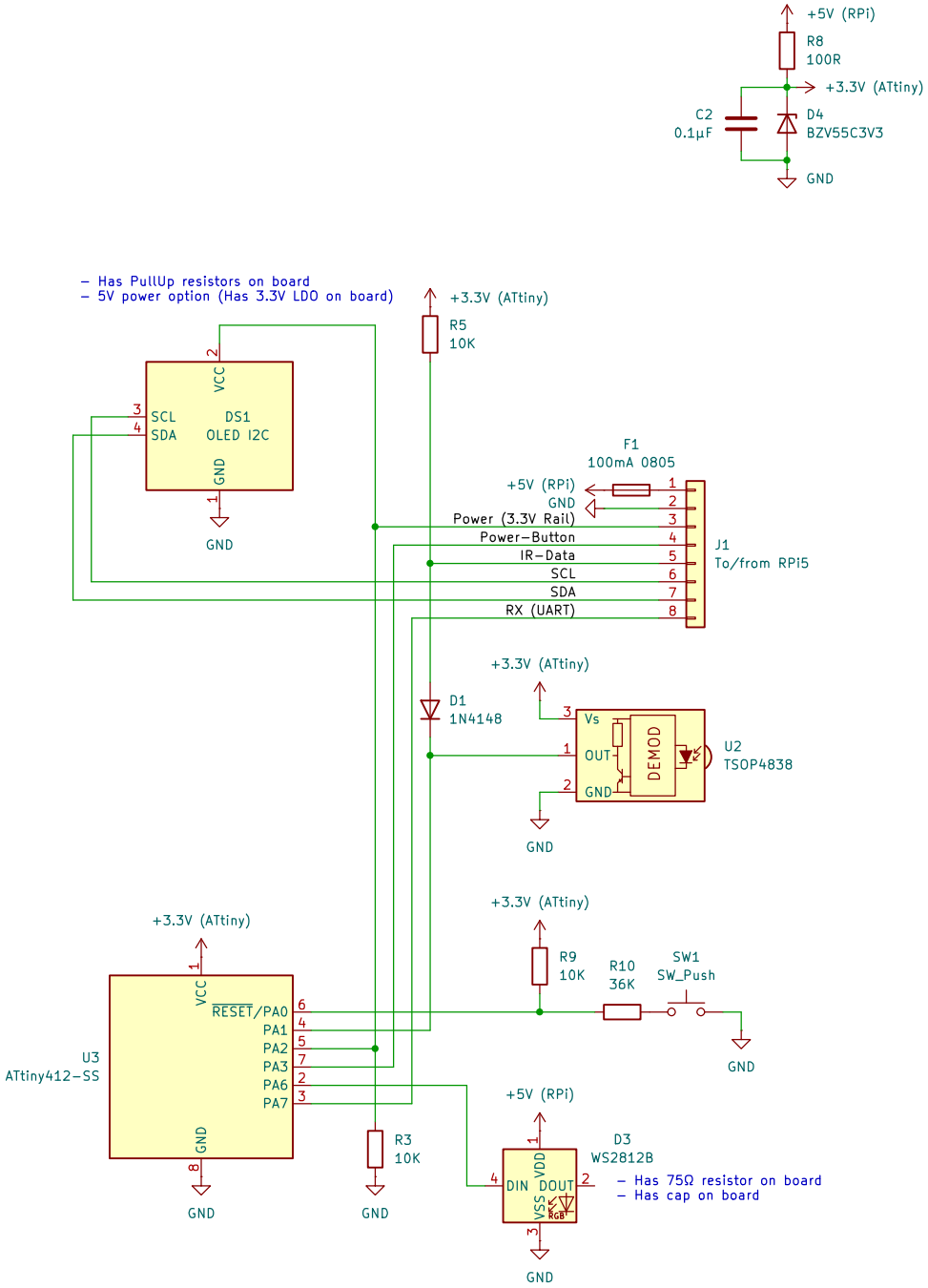

H1 MountingHole
H2 MountingHole
H3 MountingHole
H4 MountingHole

BL

Sheet: /
File: ATtiny412_RPi5_PowerButton&IR&WS2812&Oled@3.3VZener v0.01.kicad_sch

Title: RPi5 ATtiny412 PowerButton&IR&WS2812&Oled @3.3VZener

Size: A4	Date: 2026–04–21	**Rev: 0.01**
KiCad E.D.A. 10.0.1		Id: 1/1