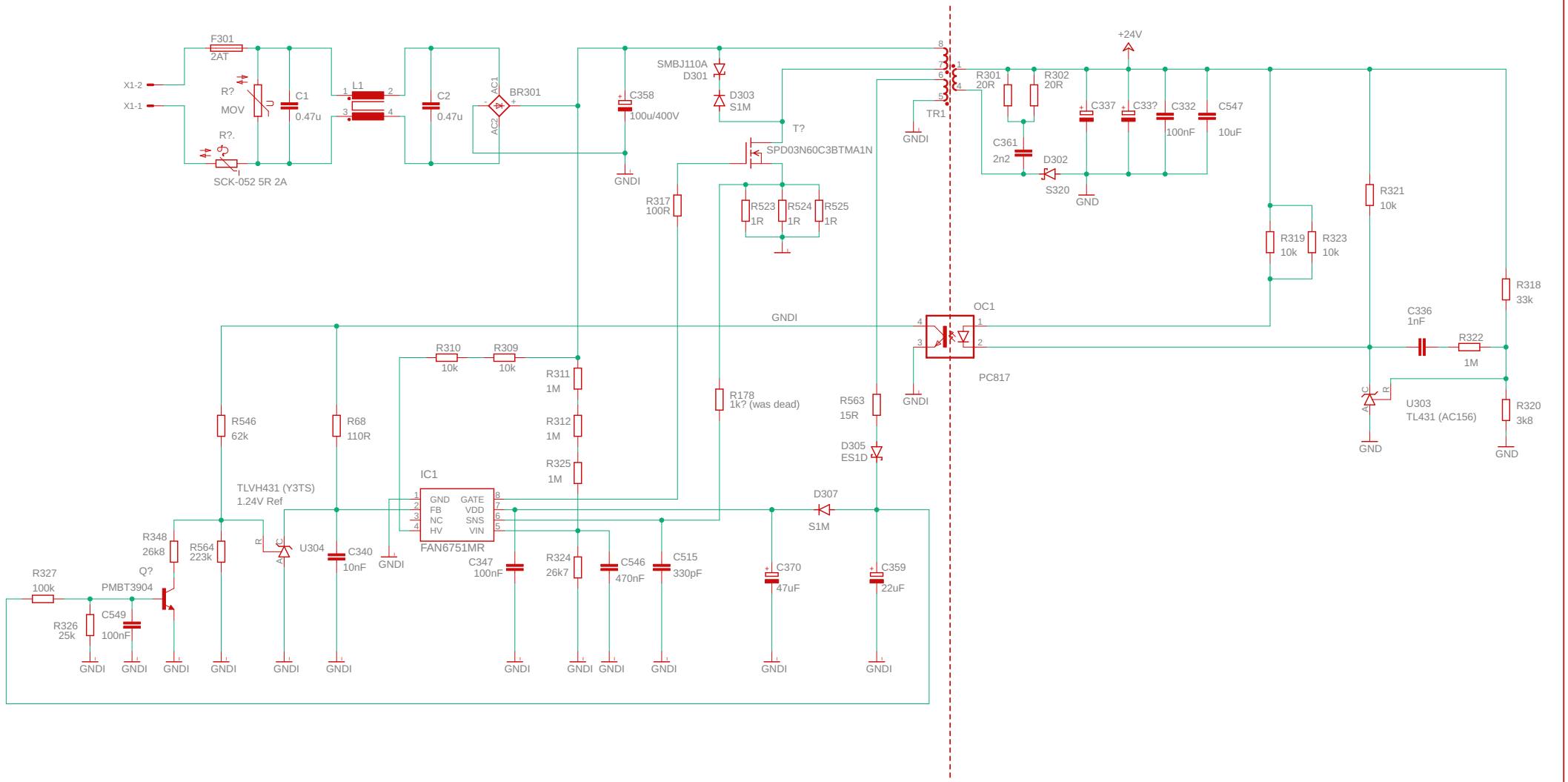

TITLE: Sonos_Play_One	
Document Number:	REV:
Date: 01.05.2026 11:25	Sheet: 1/1