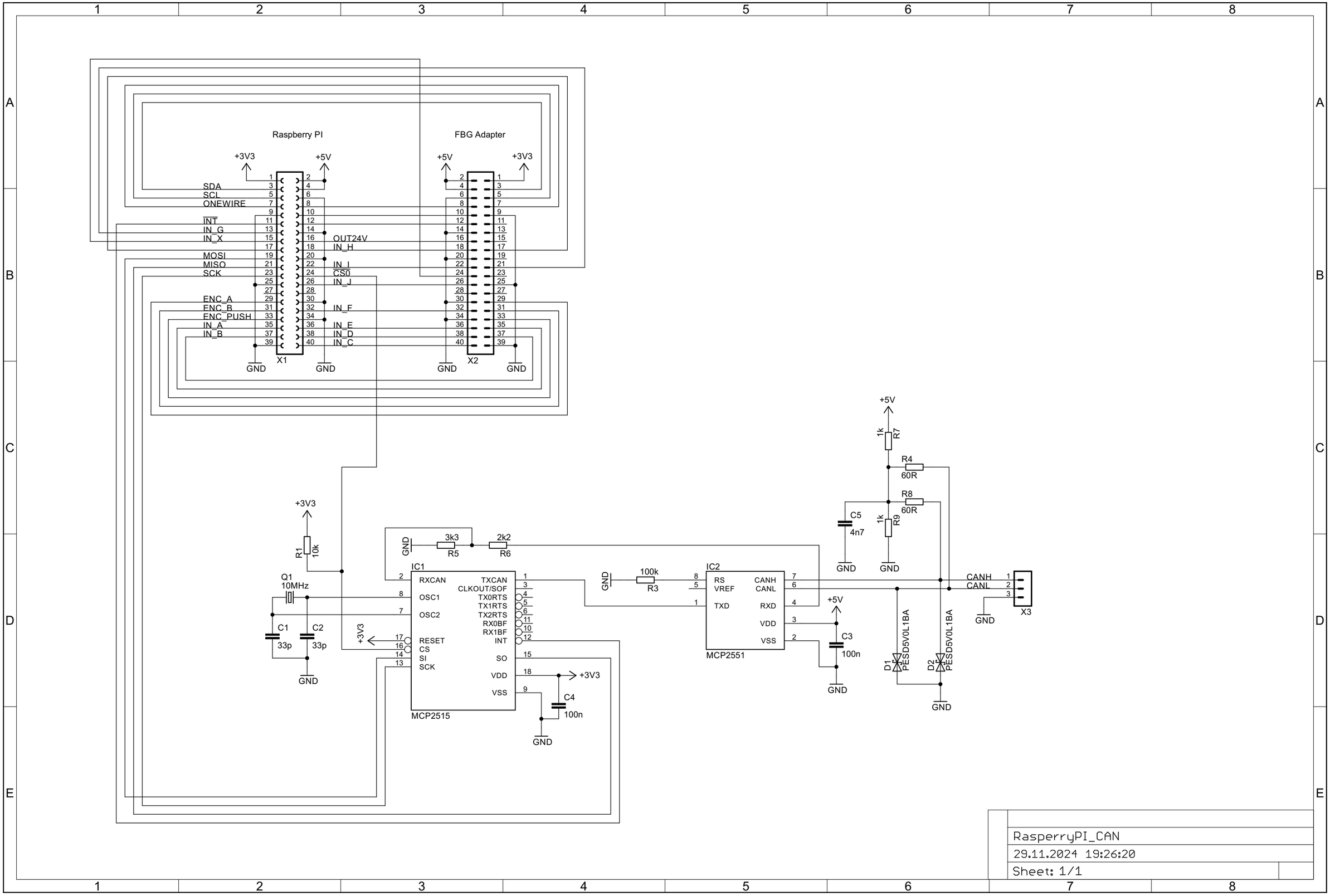
Raspberry PI
FBG Adapter
+3V3
+5V
SDA
SCL
ONEWIRE
INT
IN_G
IN_X
MOSI
MISO
SCK
ENC_A
ENC_B
ENC_PUSH
IN_A
IN_B
OUT24V
IN_H
IN_I
CS0
IN_J
IN_F
IN_E
IN_D
IN_C
X1
X2
GND
R1
10k
Q1
10MHz
C1
33p
C2
33p
IC1
RXCAN
OSC1
OSC2
RESET
CS
SI
SCK
TXCAN
CLKOUT/SOF
TX0RTS
TX1RTS
TX2RTS
RX0BF
RX1BF
INT
SO
VDD
VSS
MCP2515
3k3
R5
2k2
R6
C4
100n
100k
R3
IC2
RS
VREF
TXD
CANH
CANL
RXD
VDD
VSS
MCP2551
C3
100n
1k
R7
R4
60R
R8
60R
C5
4n7
1k
R9
D1
PESD5V0L1BA
D2
PESD5V0L1BA
X3
RasperryPI_CAN
29.11.2024 19:26:20
Sheet: 1/1