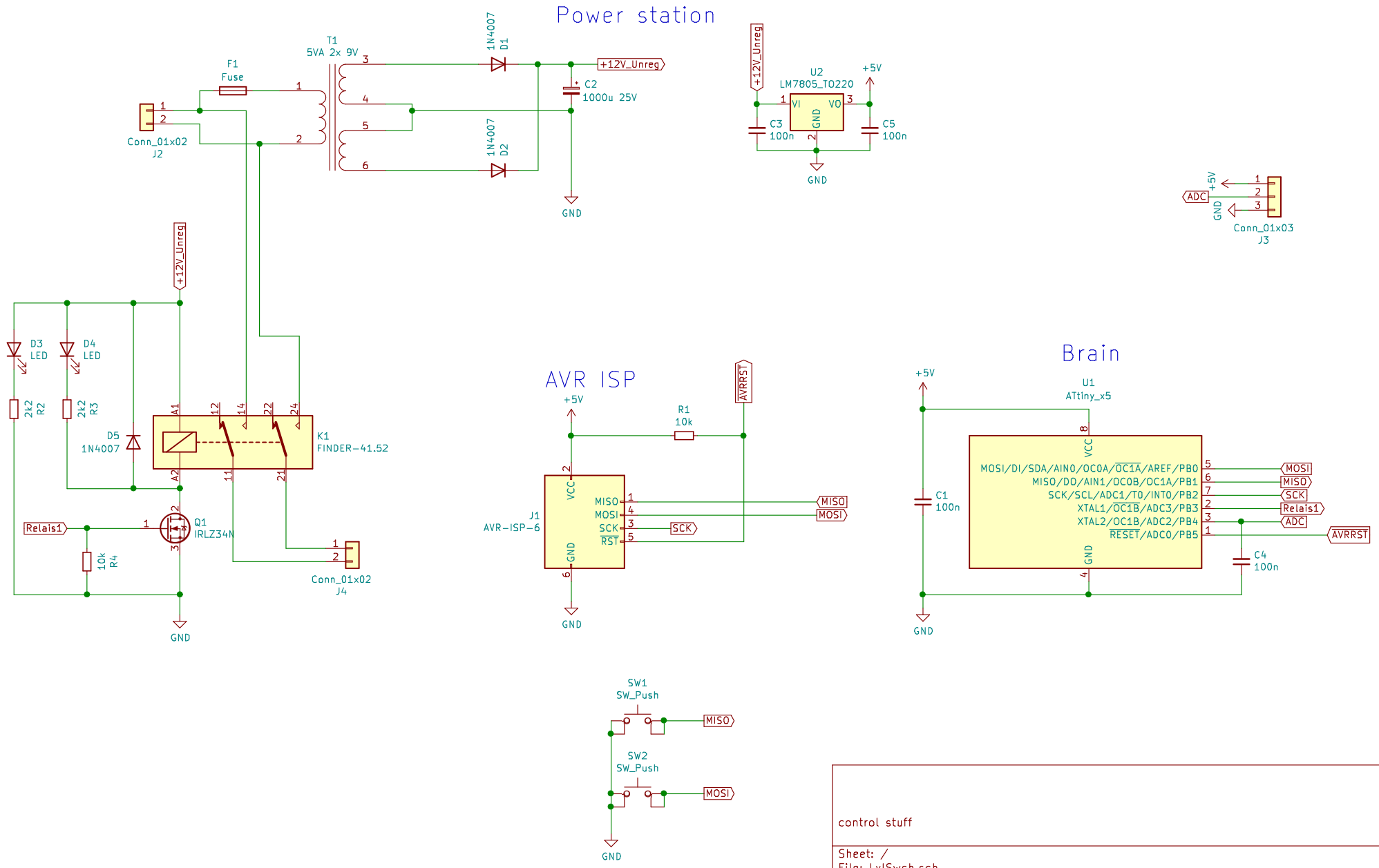

control stuff

Sheet: /
File: LvlSwch.sch

Title: µC controlled switches / SPS

Size: A4	Date: 2021-08-08	**Rev: 1**
KiCad E.D.A. eeschema 5.1.6		Id: 1/1