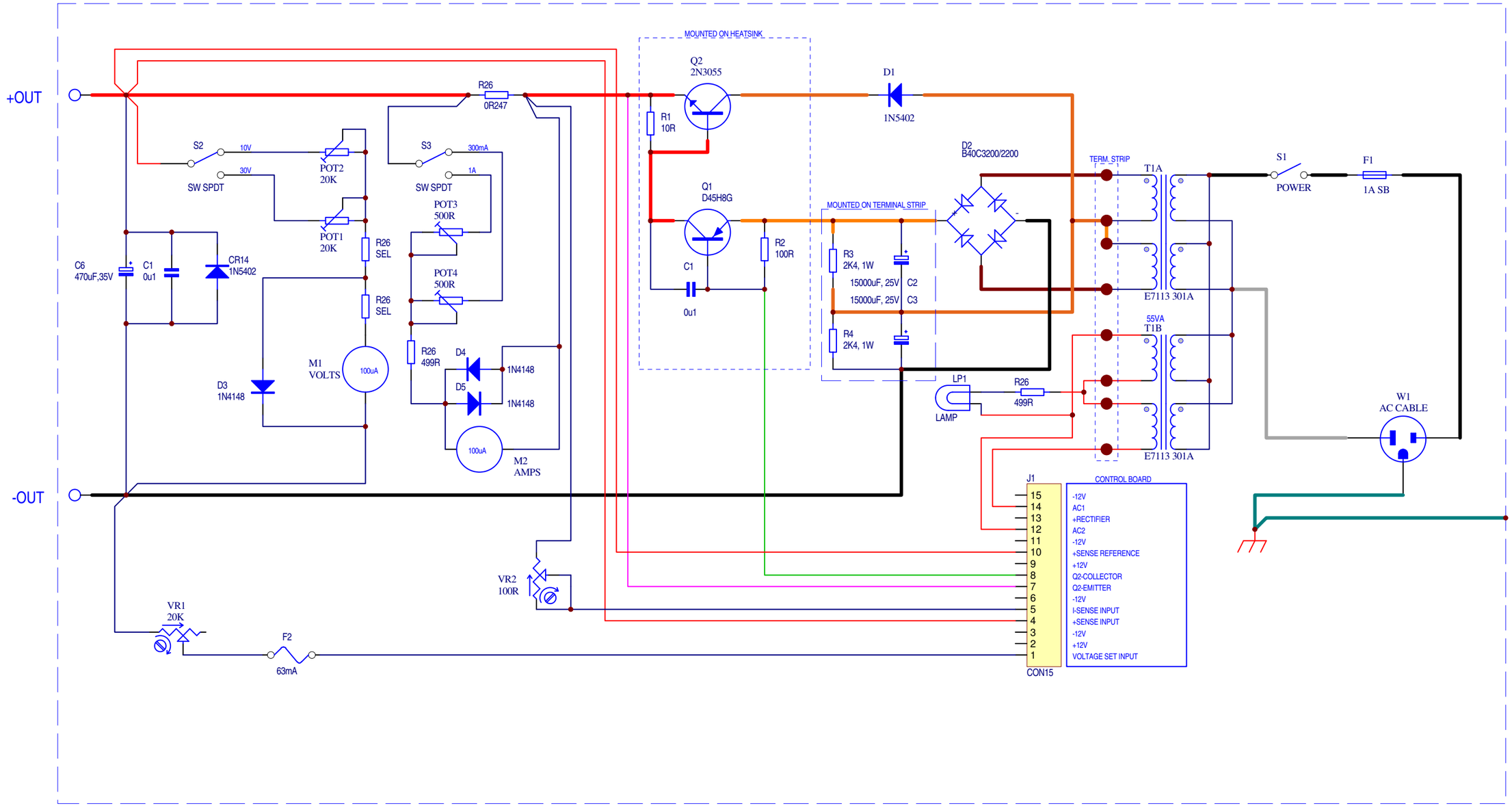
+OUT
-OUT
R26
0R247
S2
10V
30V
SW SPDT
POT2
20K
POT1
20K
S3
300mA
1A
SW SPDT
POT3
500R
POT4
500R
R26
SEL
R26
SEL
C6
470uF,35V
C1
0u1
CR14
1N5402
M1
VOLTS
100uA
D3
1N4148
R26
499R
D4
1N4148
D5
1N4148
100uA
M2
AMPS
VR2
100R
VR1
20K
F2
63mA
MOUNTED ON HEATSINK
Q2
2N3055
R1
10R
Q1
D45H8G
C1
0u1
R2
100R
D1
1N5402
D2
B40C3200/2200
MOUNTED ON TERMINAL STRIP
R3
2K4, 1W
15000uF, 25V
C2
15000uF, 25V
C3
R4
2K4, 1W
LP1
LAMP
R26
499R
TERM. STRIP
T1A
E7113 301A
55VA
T1B
E7113 301A
S1
POWER
F1
1A SB
W1
AC CABLE
J1
CON15
CONTROL BOARD
15 -12V
14 AC1
13 +RECTIFIER
12 AC2
11 -12V
10 +SENSE REFERENCE
9 +12V
8 Q2-COLLECTOR
7 Q2-EMITTER
6 -12V
5 I-SENSE INPUT
4 +SENSE INPUT
3 -12V
2 +12V
1 VOLTAGE SET INPUT