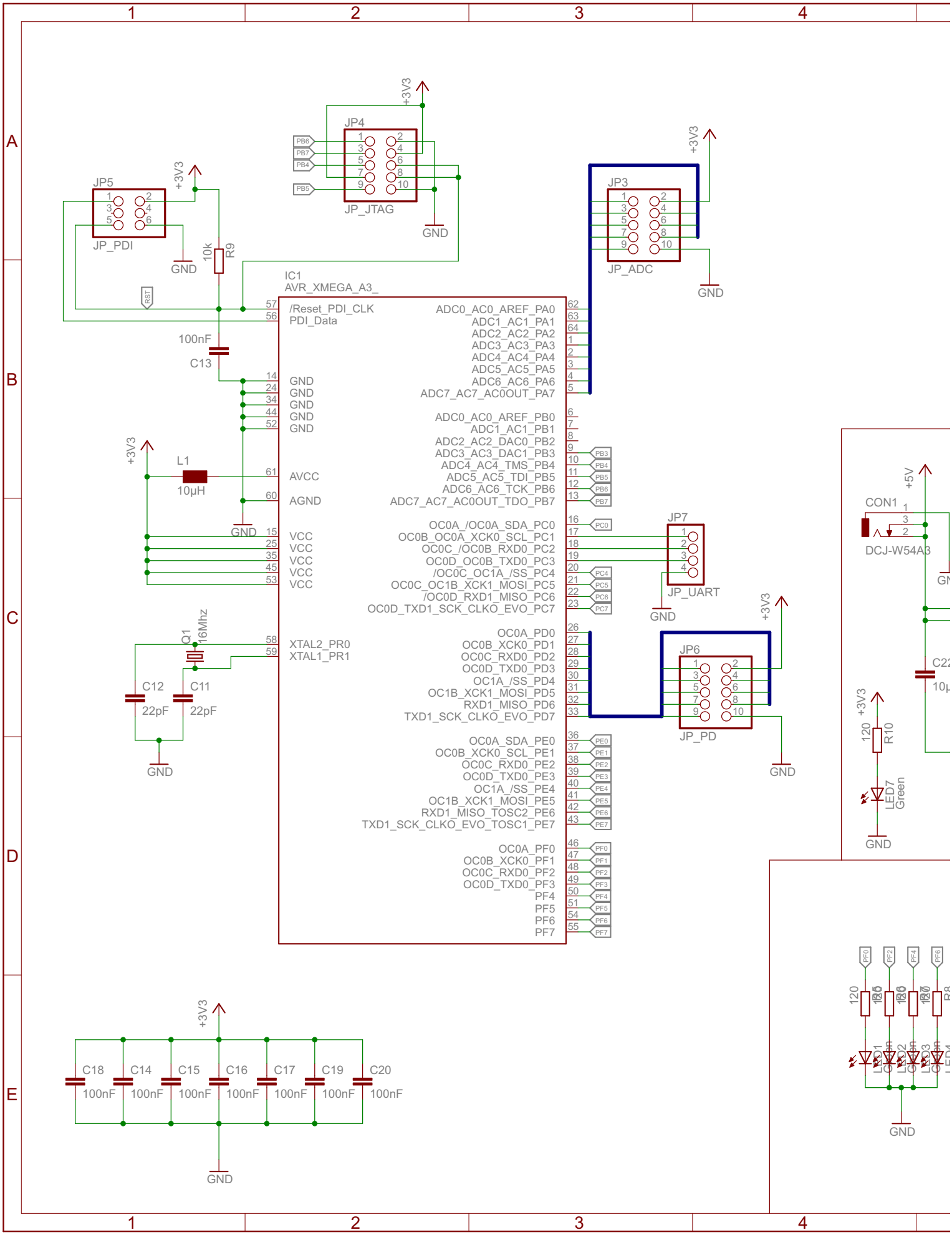
JP4
JP_JTAG
JP5
JP_PDI
JP3
JP_ADC
JP7
JP_UART
JP6
JP_PD
IC1
AVR_XMEGA_A3_
/Reset_PDI_CLK
PDI_Data
ADC0_AC0_AREF_PA0
ADC1_AC1_PA1
ADC2_AC2_PA2
ADC3_AC3_PA3
ADC4_AC4_PA4
ADC5_AC5_PA5
ADC6_AC6_PA6
ADC7_AC7_AC0OUT_PA7
ADC0_AC0_AREF_PB0
ADC1_AC1_PB1
ADC2_AC2_DAC0_PB2
ADC3_AC3_DAC1_PB3
ADC4_AC4_TMS_PB4
ADC5_AC5_TDI_PB5
ADC6_AC6_TCK_PB6
ADC7_AC7_AC0OUT_TDO_PB7
OC0A_/OC0A_SDA_PC0
OC0B_OC0A_XCK0_SCL_PC1
OC0C_/OC0B_RXD0_PC2
OC0D_OC0B_TXD0_PC3
/OC0C_OC1A_/SS_PC4
OC0C_OC1B_XCK1_MOSI_PC5
/OC0D_RXD1_MISO_PC6
OC0D_TXD1_SCK_CLKO_EVO_PC7
OC0A_PD0
OC0B_XCK0_PD1
OC0C_RXD0_PD2
OC0D_TXD0_PD3
OC1A_/SS_PD4
OC1B_XCK1_MOSI_PD5
RXD1_MISO_PD6
TXD1_SCK_CLKO_EVO_PD7
OC0A_SDA_PE0
OC0B_XCK0_SCL_PE1
OC0C_RXD0_PE2
OC0D_TXD0_PE3
OC1A_/SS_PE4
OC1B_XCK1_MOSI_PE5
RXD1_MISO_TOSC2_PE6
TXD1_SCK_CLKO_EVO_TOSC1_PE7
OC0A_PF0
OC0B_XCK0_PF1
OC0C_RXD0_PF2
OC0D_TXD0_PF3
PF4
PF5
PF6
PF7
GND
AVCC
AGND
VCC
XTAL2_PR0
XTAL1_PR1
+3V3
10k
R9
100nF
C13
L1
10µH
Q1
16Mhz
C12
22pF
C11
22pF
C18
C14
C15
C16
C17
C19
C20
CON1
DCJ-W54A3
+5V
120
R10
LED7
Green

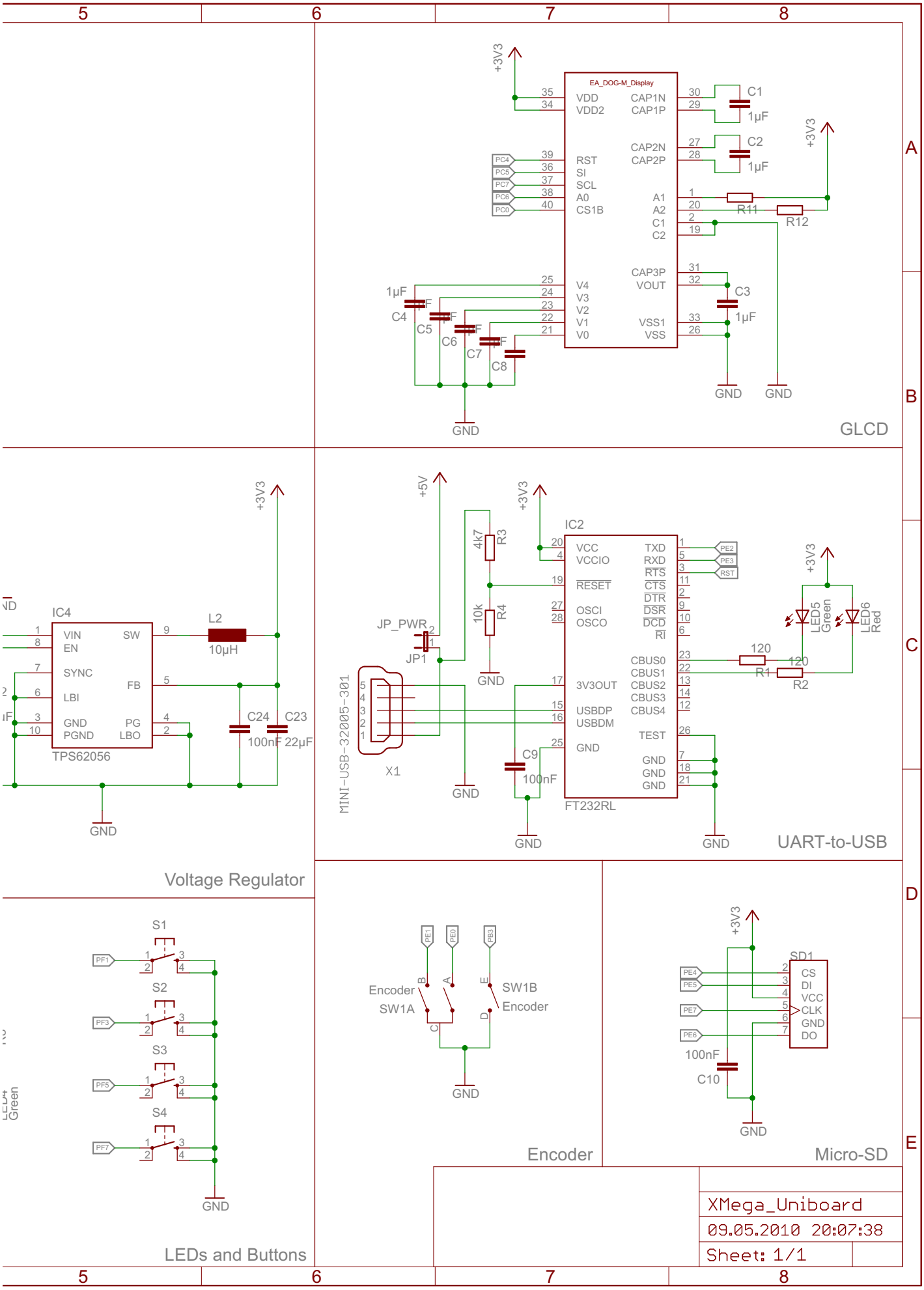
EA_DOG-M_Display
VDD
VDD2
CAP1N
CAP1P
CAP2N
CAP2P
RST
SI
SCL
A0
CS1B
A1
A2
C1
C2
CAP3P
VOUT
V4
V3
V2
V1
V0
VSS1
VSS
+3V3
C1
1µF
C2
1µF
R11
R12
C3
1µF
C4
1µF
C5
C6
C7
C8
GND
GLCD
IC4
VIN
EN
SYNC
LBI
GND
PGND
SW
FB
PG
LBO
TPS62056
L2
10µH
C24
100nF
C23
22µF
Voltage Regulator
+5V
4k7
R3
10k
R4
JP_PWR
JP1
IC2
VCC
VCCIO
RESET
OSCI
OSCO
3V3OUT
USBDP
USBDM
TXD
RXD
RTS
CTS
DTR
DSR
DCD
RI
CBUS0
CBUS1
CBUS2
CBUS3
CBUS4
TEST
FT232RL
MINI-USB-32005-301
X1
C9
100nF
LED5
Green
LED6
Red
120
R1
R2
UART-to-USB
S1
S2
S3
S4
LEDs and Buttons
Encoder
SW1A
SW1B
Encoder
SD1
CS
DI
VCC
CLK
GND
DO
100nF
C10
Micro-SD
XMega_Uniboard
09.05.2010 20:07:38
Sheet: 1/1