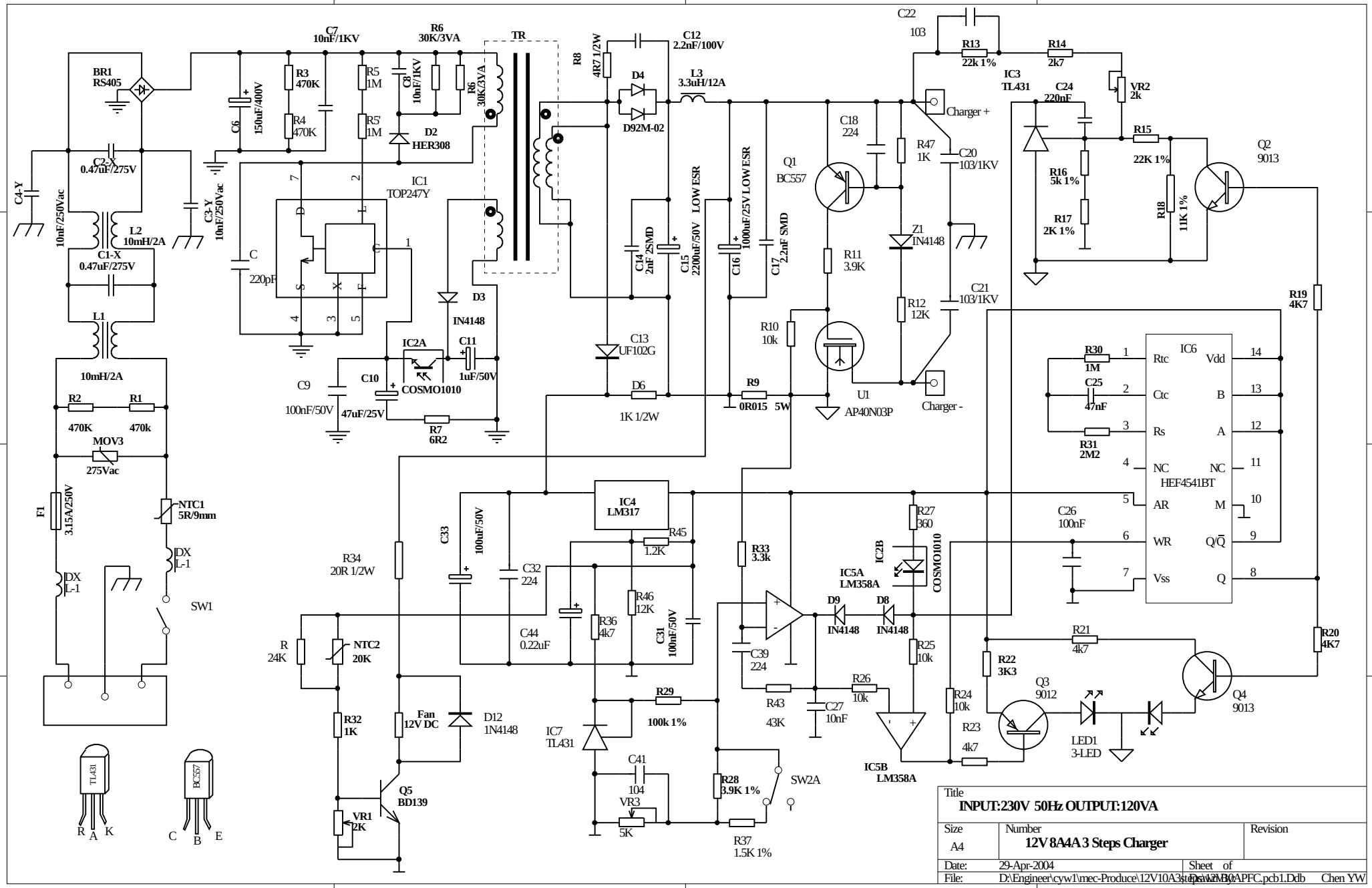
BR1
RS405
C4-Y
10nF/250Vac
C2-X
0.47uF/275V
L2
10mH/2A
C1-X
0.47uF/275V
L1
10mH/2A
R2
470K
R1
470k
MOV3
275Vac
F1
3.15A/250V
NTC1
5R/9mm
DX
L-1
SW1
C6
150uF/400V
C7
10nF/1KV
R3
470K
R4
470K
R5
1M
R5'
1M
C8
10nF/1KV
R6
30K/3VA
D2
HER308
IC1
TOP247Y
C3-Y
10nF/250Vac
C
220pF
D3
IN4148
IC2A
COSMO1010
C11
1uF/50V
C10
47uF/25V
C9
100nF/50V
R7
6R2
TR
R8
4R7 1/2W
D4
D92M-02
C12
2.2nF/100V
L3
3.3uH/12A
C14
2nF 2SMD
C15
2200uF/50V LOW ESR
C16
1000uF/25V LOW ESR
C17
2.2nF SMD
C13
UF102G
D6
1K 1/2W
R9
0R015 5W
Q1
BC557
C18
224
R47
1K
Z1
IN4148
R11
3.9K
R12
12K
R10
10k
U1
AP40N03P
C22
103
R13
22k 1%
R14
2k7
IC3
TL431
C24
220nF
VR2
2k
Charger +
C20
103/1KV
C21
103/1KV
Charger -
R15
22K 1%
R16
5k 1%
R17
2K 1%
R18
11K 1%
Q2
9013
R19
4K7
IC6
HEF4541BT
Rtc
Ctc
Rs
NC
AR
WR
Vss
Vdd
B
A
NC
M
Q/Q̄
Q
R30
1M
C25
47nF
R31
2M2
C26
100nF
R20
4K7
IC4
LM317
R45
1.2K
C33
100uF/50V
C32
224
R34
20R 1/2W
R46
12K
R36
4k7
C31
100nF/50V
C44
0.22uF
R33
3.3k
C39
224
R27
360
IC2B
COSMO1010
IC5A
LM358A
D9
IN4148
D8
IN4148
R25
10k
R26
10k
R43
43K
C27
10nF
IC5B
LM358A
R24
10k
R23
4k7
R22
3K3
R21
4k7
Q3
9012
Q4
9013
LED1
3-LED
R
24K
NTC2
20K
R32
1K
Fan
12V DC
D12
1N4148
Q5
BD139
VR1
2K
IC7
TL431
R29
100k 1%
C41
104
VR3
5K
R28
3.9K 1%
SW2A
R37
1.5K 1%
TL431
R A K
BC557
C B E
Title
INPUT:230V 50Hz OUTPUT:120VA
Size
A4
Number
12V 8A4A 3 Steps Charger
Revision
Date: 29-Apr-2004
Sheet of
File: D:\Engineer\cyw1\mec-Produce\12V10A3steps\12V30APFC.pcb1.Ddb
Chen YW